INSTALLATION

AND

INSTRUCTION

MANUAL

PHASE DYNAMICS, INC.

Full Range Water in Hydrocarbon Analyzer

Enhanced/Expanded

04/26/2021

Document Number 0063-00003-000 Rev E

ECO Number 411

WARRANTY

This Phase Dynamics product is warranted against defects in material and workmanship for a period of one year from date of shipment. During the warranty period, Phase Dynamics will, at its option, either repair or replace products which are defective.

For warranty service or repair, this product must be returned to Phase Dynamics. Buyer shall prepay shipping charges to Phase Dynamics and Phase Dynamics shall pay shipping charges to return the product to the Buyer. However, Buyer shall pay ALL shipping charges, duties, and taxes for products returned to (or from) Phase Dynamics from (or to) a country other than the contiguous states of the United States of America.

Phase Dynamics warrants that its software and firmware designated by Phase Dynamics for use with an instrument will execute its programming instructions when properly installed on that instrument. Phase Dynamics does not warrant that the operation of the instrument, or software, or firmware will be uninterrupted or error free.

ATTENTION

The Analyzer Module is a sealed unit. Opening the unit will void the warranty. Any information contained within this document that refers to the internal configuration of the analyzer module is for authorized factory technician use only.

LIMITATION OF WARRANTY

The foregoing warranty shall not apply to defects resulting from improper or inadequate maintenance by Buyer, Buyer supplied software or interfacing, unauthorized modification or misuse, operation outside of the environmental specifications for the product, or improper site preparation or maintenance.

EXCLUSIVE REMEDIES

The remedies provided herein are Buyer's sole and exclusive remedies. Phase Dynamics shall not be liable for any direct, indirect, special, incidental, or consequential damages, whether based on contract, tort, or any other legal theory.

SAFETY INFORMATION

THIS PRODUCT AND RELATED DOCUMENTATION MUST BE REVIEWED FOR FAMILIARIZATION WITH SAFETY MARKINGS AND INSTRUCTIONS BEFORE OPERATION.

SAFETY LABELS

WARNING:

Denotes a hazard. It calls attention to a procedure, practice, or the like, which, if not correctly performed or adhered to, could result in personal injury. Do not proceed beyond a WARNING sign until the indicated conditions are fully understood and met.

CAUTION:

Denotes a hazard. It calls attention to an operating procedure, practice, or the like, which, if not correctly performed or adhered to, could result in damage to or destruction of part or all of the product. Do not proceed beyond a CAUTION sign until the indicated conditions are fully understood and met.

ATTENTION:

Denotes an important step or technical note. It calls attention to an important procedure or note.

Contents

1. Overview 13

1.1. System description 13
1.2. System Specifications 14
1.3. Measurement Section Types and Specifications 15
1.4. Measurement Section Description 16
1.5. Electronics Enclosure Options 16
1.6. Electronics 16

2. Installation 19

2.1. Pre-Installation notes 19
2.2. Measurement Section Mounting Considerations 20
2.2.1. Horizontal Installations 24
2.2.2. Vertical Installations 26
2.3. Sampling Port 28
2.4. Electronics Enclosure 28
2.5. Electrical Wiring 29
2.5.1. Power Supply Connections 29
2.5.2. System Cable Connection 32
2.5.3. RTD Connections 33
2.5.4. Electronic Enclosure Heater Connections 34
2.6. Signals Wiring 36
2.6.1. Analog Inputs and Outputs 36
2.6.2. Pulse Inputs 38
2.6.3. Communication Ports 41
2.6.4. Relays 43
2.6.5. HART® Port (Optional) 44

3. Theory of Operation 46

3.1. Oil Oscillator Calibration 46

3.2. Water Oscillator Calibration 46
3.3. Phase Detection 47
3.4. Temperature Compensation 49

4. Four Lines LCD Menu Description 50

4.1. Change TECH Password 54
4.2. Change WP Password (Write protection) 54
4.3. Information Screen: 54
4.4. Diagnostics: 55
4.5. Time and Date: 56
4.6. Phase Holdover: 56
4.7. Process Averaging: 56
4.8. Stream Select: 56
4.9. Force Phase 57
4.10. Temperature Unit: 57
4.11. Temperature Adjust: 57
4.12. Average Temperature: 57
4.13. Capture (Oil Phase) 57
4.14. Cal (Oil Phase) 57
4.15. Capture (Water Phase) 58
4.16. Cal (Water Phase) 58
4.17. Adjust (Oil Phase) 58
4.18. Adjust (Water Phase) 58
4.19. Salinity 58
4.20. FC1 Density Adjust 58
4.21. Access Tech Mode: 59
4.22. Process Low (%): 59
4.23. Process High (%): 59
4.24. Oil Index (MHz) 59
4.25. Water Index (Mhz) 59
4.26. Oil Frequency Low (MHz) 59

4.27. Oil Frequency High (MHz) 59
4.28. Water Frequency Low 60
4.29. Water Frequency High 60
4.30. Oil P1 (V/MHz): 60
4.31. Oil Po (V): 60
4.32. Configure Com ports: 60
4.32.1. Submenu MODBUS® Com x 60
4.32.2. Submenu for HART communication port: 62
4.33. Configure Relay: 63
4.33.1. Manual Option: 63
4.33.2. Variable Status: 63
4.33.3. Variable Compared with Set Point 64
4.33.4. Toggle: 64
4.33.5. Diagnostics1 and Diagnostics2: 64
4.33.6. Other: 66
4.34. Configure AI (Analog Inputs): 66
4.34.1. AI #x Variable: 66
4.34.2. AI #x Unit: 66
4.34.3. AI #x LRV: 66
4.34.4. AI #x URV: 66
4.34.5. AI #x Trim 4 mA: 66
4.34.6. AI #x Trim 20 mA: 66
4.34.7. AI #x Dampening (s): 66
4.34.8. Analog Input #x: 66
4.35. Configure AO (Analog Outputs): 67
4.35.1. AO #x Variable: 67
4.35.2. AO #x Unit: 67
4.35.3. AO #x LRV: 67
4.35.4. AO #x URV: 67
4.35.5. AO #x Trim 4 mA: 67
4.35.6. AO #x Trim 20 mA: 67
4.35.7. AO #x Alarm Select: 68

4.35.8. AO #x Mode: 68
4.35.9. AO #x Dampening (s): 68
4.36. Trim RTD Lo (Software Version 6.09 and over) 68
4.37. Trim RTD Hi (Software Version 6.09 and Over) 68
4.38. Density Correction: 69
4.38.1. Coriolis Options: 69
4.38.2. Density Correction Unit: 70
4.38.3. Calibration Density: 70
4.38.4. Density Coeff. D3: 70
4.38.5. Density Coeff. D2: 70
4.38.6. Density Slope D1: 70
4.38.7. Density Adj Offset D0: 71
4.38.8. FC1 Density Adjust: 71
4.39. Configure Flow Computer 71
4.39.1. FC1 Enable: 71
4.39.2. FC1 Gross Enable: 71
4.39.3. FC1 Pulse Enable: 72
4.39.4. FC1 Density Enable: 72
4.39.5. FC1 Net Enable: 72
4.39.6. FC1 Flow Class: 72
4.39.7. FC1 Flow Unit: 72
4.39.8. FC1 Accumulator Unit: 72
4.39.9. FC1 #Pulses/volumetric or mass total unit: 72
4.39.10. FC1 Temperature Unit: 72
4.39.11. FC1 Density Units: 72
4.39.12. FC1 Pressure Units: 72
4.39.13. FC1 Manual Density: 72
4.39.14. FC1 Manual Pressure: 72
4.39.15. FC1 Manual Flow: 72
4.39.16. FC1 Use PDI WC: 73
4.39.17. FC1 Use PDI Temperature: 73
4.39.18. FC1 Use PDI Salinity: 73

4.39.19. FC1 API Table: 73
4.39.20. M.F.: 73
4.39.21. SHRINK: 73
4.39.22. FC1 Oil Dens@ST (API): 73
4.39.23. FC1 Water Dens@ST (Kg/m3): 73
4.39.24. FC1 Oil Dens@PT (API): 74
4.39.25. FC1 Water Dens@PT (Kg/m3): 74
4.39.26. FC1 Density Adjust: 74
4.40. USB Logging (Optional) 74
4.41. Restart: 75
4.42. Restore Factory Defaults: 75

5. Touch Screen Menu Description 76

5.1. General operation of the screens 76
5.1.1. Editing Values on a text box 76
5.1.2. Using Buttons 77
5.2. Operating List Boxes 77
5.2.1. Toggling check mark statuses 78
5.2.2. Saving Configurations 79
5.3. Screen types 80
1.1.1. 80
5.3.1. Operation Screens 80
5.3.2. Main Screen 82
5.3.3. Detailed Screen 82
5.3.4. Average Temperature Screen 83
5.3.5. Adjustments Screen number 1 83
5.3.6. Adjustments Screen number 2 86
5.3.7. Adjustment Screen Number 3 87
5.3.8. Adjustment Screen Number 4 87
5.3.9. Heuristic Salinity© (Optional) 87
5.4. Configuration screens 88

5.4.1. Utilities 89
5.4.2. Peripherals Configuration 96

6. Operation 113

6.1. Offset (Adjust Oil) Calculation 114
6.1.1. Manual Calculation 114
6.1.2. Automatic Offset (Oil Adjust) Calculation in a 4-Lines LCD Display 115
6.1.3. Automatic Offset (Oil Adjust) Calculation in a Touch-Screen 116
6.2. Salinity Determination 116
6.2.1. CAPTURE (WATER PHASE) in a 4-lines LCD display 117
6.2.2. Capture (Water Phase) in a Touch-Screen 118
6.2.3. Heuristic Salinity© (Optional) 118

7. Flow Computer 119

8. Density Correction 121

8.1. General Configuration on a 4 lines LCD Display 123
8.2. General Configuration on a Touch-screen 124
8.3. Specific Configuration for Density Correction using a 4-20 mA Density Signal 128
8.3.1. Wiring 128
8.3.2. Setting the Analog Input on a 4 Lines LCD Display 128
8.3.3. Setting the Analog Input on a Touch-Screen Display 130
8.4. Specific Conf. for Density Correction using a ® Coriolis Meter 131
8.4.1. Wiring 131
8.4.2. ® Meter Configuration 132
8.5. Specific Configurations for Density Correction via MODBUS® (Option C) 132
8.5.1. Wiring 132
8.5.2. Operation via MODBUS® 132
8.6. Configuration of the Communication Ports on a LCD Screen 132
8.7. Configuration of the Communication Ports on a Touch-Screen 133
8.8. Saving Configurations 135

9. Instrument Repair and Service 136

9.1. Assistance and Factory address 136
9.2. Preventive Maintenance 136
9.3. Repair 136
9.3.1. Measurement Section and Analyzer 136
9.3.2. Returning Items to the Factory 136
9.3.3. Returning the Analyzer and the Measurement Section 136
9.4. Troubleshooting Worksheet 137
9.5. Troubleshooting Guide 142
9.6. Error Descriptions 144
9.7. Diagnostic Error Codes 145

10. MODBUS® RTU 146

1 Valid Function Codes 146

2 Address (Data) Type 146

3 Access 146

4 Description 146

10.1. Floating-Point / Long Integer Format 146
10.2. Integer / ASCII-Pair Format 146
10.3. Diagnostics Register Bit Definitions 147
10.4. Diagnostics Error Code 147
10.5. Saving the User Configuration 148
10.6. Write-Protection 148
10.7. Calibration with MODBUS® 149
10.8. MODBUS® Tables 149
10.8.1. MODBUS® INTEGER TABLE 149
10.8.2. MODBUS® FLOATING-POINT / LONG INTEGER TABLE 153
10.8.3. MODBUS® DISCRETE IO / COIL TABLE 159
10.8.4. MODBUS® COEFFICIENT TABLE (IEEE ABCD) 160

11. HART® 161

11.1. COMMAND 128: READ FLOATING-POINT DEVICE PARAMETERS 163

11.1.1. Command 128 Response 163

11.1.2. Request Data Bytes 163

11.1.3. Response Data Bytes 163

11.1.4. Command-Specific Response Codes 164

11.2. COMMAND 129: WRITE FLOATING-POINT DEVICE PARAMETER 165

11.2.1. Request Data Bytes 165

11.2.2. Response Data Bytes 165

11.2.3. Command-Specific Response Codes 165

11.3. COMMAND 130: READ DISCRETE 166

11.3.1. Request Data Bytes 166

11.3.2. Response Data Bytes 166

11.3.3. Command-Specific Response Codes 166

11.4. COMMAND 131: WRITE DISCRETE 167

11.4.1. Request Data Bytes 167

11.4.2. Response Data Bytes 167

11.4.3. Command-Specific Response Codes 167

11.5. COMMAND 132: READ INTEGER DEVICE PARAMETER 168

11.5.1. Command 132 Response Based on Number of Integer Device Parameters Requested .. 168

11.5.2. Request Data Bytes 168

11.5.3. Response Data Bytes 168

11.5.4. Command-Specific Response Codes 169

11.6. COMMAND 133: WRITE INTEGER DEVICE PARAMETER 170

11.6.1. Request Data Bytes 170

11.7. COMMAND 134: READ DEVICE VARIABLES 171

11.7.1. Command 134 Response Based on Number of Device Variables Requested 171

11.7.2. Request Data Bytes 171

11.7.3. Response Data Bytes 171

11.7.4. Command-Specific Response Codes 173

11.8. COMMAND 135: READ INTEGER DEVICE VARIABLES 174

11.8.1. Command 135 Response Based on Number of Integer Device Parameters Requested .. 174
11.8.2. Request Data Bytes 174
11.8.3. Response Data Bytes 174
11.8.4. Command-Specific Response Codes 175
11.9. HART® TABLES 176
11.9.1. HART® DYNAMIC VARIABLES 176
11.9.2. HART® DEVICE PARAMETERS – FLOATING-POINT 177
11.9.3. HART® DEVICE DISCRETES 178
11.9.4. HART® DEVICE PARAMETERS – INTEGER 179
11.9.5. HART® DEVICE VARIABLES 180

12. Dimensional Installation Drawings 184

1. Overview

1.1. System description

The Phase Dynamics analyzer is a microwave device that measures the percentage of water in a flowing hydrocarbon liquid stream. The measurement technique is based on a principle known as load-pull. The system is designed with no moving parts and is calibrated for the highest accuracy over a broad range of water cuts, salinities and temperatures.

The system consists of 5 components, as shown in Figure 1.1:

1. Electronics enclosure with 4-line LCD display or optional color touch-screen
2. Measurement section with an oscillator inside the explosion-proof football
3. A system cable connecting the two
4. Ground cable
5. Temperature sensor (RTD) used for temperature correction

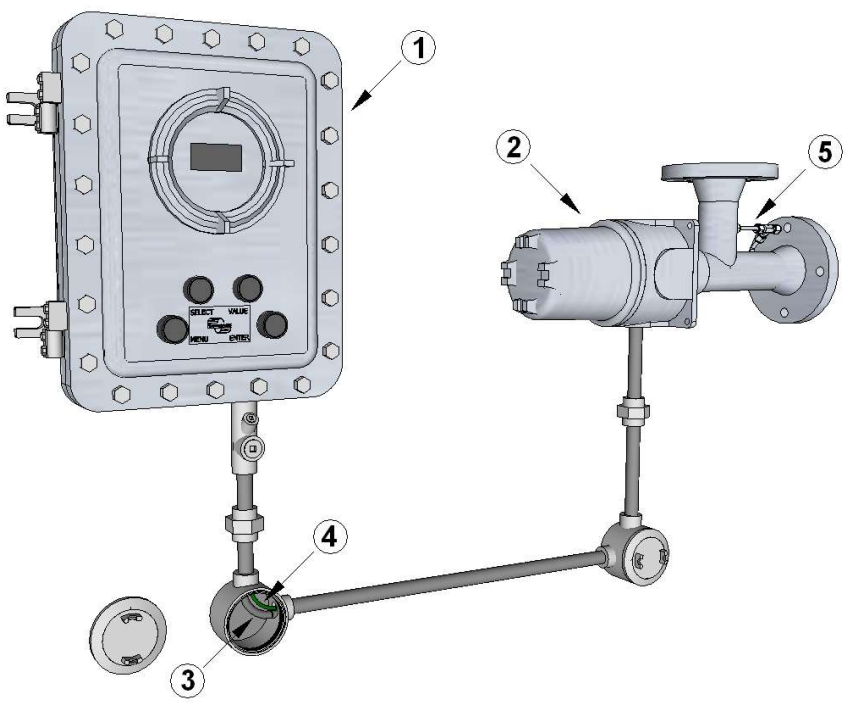

Figure 1.1

1.2. System Specifications

The following table resumes all the specification for Full Range Analyzers.

Range	0-100%	
Uncertainty	Oil Phase +/-0.5	Water Phase +/- 1%
Repeatability	Oil Phase +/- 0.1%	Water Phase +/- 0.5
Resolution	0.1%	
Salinity	Oil Phase: Not affected by salinity – Water Phase: 0.1% to 25%	
Process Temperature	0 - 71ºC (32 - 160ºF); 0 - 104ºC (32 - 220ºF); 0 to 204°C (32 – 400 °F) or 0 – 315°C (32 – 600°F)	
Fluid Temperature Compensation	Automatic with Built-In RTD Temperature Probe	
Fluid Densities	500 to 1150 Kg/m3	
Minimum Flow Speed	2 feet per second (0.6 m per second)	
Maximum Flow Speed	14 feet per second (4.25 m per second)	
Oscillator Frequency	90 to 300 MHz (For Full Range Analyzers only)	
Radio Frequency Power	0.2W	
Power Requirements	24VDC +/- 5% or 100-240 VAC 50/60Hz, 16 Watts Typical, 27 Watts Maximum for Enhanced Electronics with LCD display.	
Ambient Temperature Ranges	0 to 48ºC (32 to 120ºF), Sun Shade Recommended -40 to 48ºC (-40 to 120ºF), with Optional Enclosure Heater	
Analog Inputs	Enhanced Electronics: 1 x 4-20mA – Expanded Electronics 5 x 4-20mA	
Analog Outputs	Enhanced Electronics: 1 x 4-20mA – Expanded Electronics 5 x 4-20mA	
Pulse Inputs	Enhanced Electronics: 1 x Pulse Input - Expanded Electronics 3 x Pulse Inputs	
MODBUS Ports	4 x MODBUS ports (see note below)	
HART Communication	1 x Port on Analog Output 1 (Optional)	

Note: The Optional Touch Screen uses the Communication Port number 2 making this port unavailable for the user. All the ports are slaves unless they are used to read a Micro Motion® flow meter in applications Involving Density Correction or on our CCM (Compact Cyclone Meter).

1.3. Measurement Section Types and Specifications

Phase Dynamics has 4 basic types of measurement section configurations.

"L" configuration	"U" Configuration
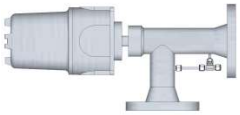	
"Z" configuration	Insertion
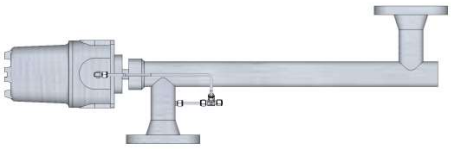	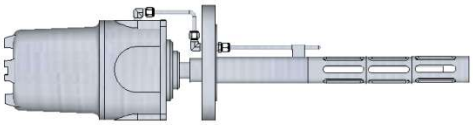

- Installation Weight and Size: See Installation Drawings in Section 12
- All factory and production sequences are ISO 9001:2015 Certified.
- Optional Certifications: ATEX, PED, CSA, FM, IECEx
- Area Classifications:
  - Explosion Proof Enclosure
    - Available materials: Cast Aluminum and Stainless Steel 316L
    - Class 1, Div 1, Groups C & D.
    - SIRA99ATEX1049:
      - EEx d IIB T5 89°C (Tamb= -40°C to + 60°C) Control Enclosure
      - EEx d IIB T5 78°C (Tamb= -40°C to + 60°C) Analyzer Enclosure
    - IECEx
      - Ex db IIB T5 Gb
      - Ex tb IIIB T89° Db (Control Enclosure)
      - Ex tb IIIB T78°C Db (Analyzer Enclosure)

ATTENTION:
Ex db/Ex tb IP66 rated cable gland to be used by the end user accordingly
Ex db /Ex tb blanking plug to be used in the event any entry is not being used by the end user.

    - IP66
    - NEMA4X, NEMA 7
  - Fiber Glass Enclosure
    - NEMA 4X
- Process Connections: For U, L and Z configurations: 2, 3 and 4 inch ANSI 150, 300, 600, 900 or 1,500 flanges. For Insertion units: 3 inch flange only ANSI 150, 300, 600 or 900.
- Materials of wet parts: Stainless Steel 316L and Hastelloy. (For other materials consult factory)

1.4. Measurement Section Description

The Figure 1.2 shows a transversal cut view of a "U" type measurement section. It is a coaxial wave guide connected to an oscillator without any moving parts. The microwave energy travels in the space surrounding the center rod and the propagation of that energy is affected directly by the permittivity of the fluid. This is the physical property that allows this analyzer to measure water cut. It also includes a temperature sensor (RTD) for temperature compensation.

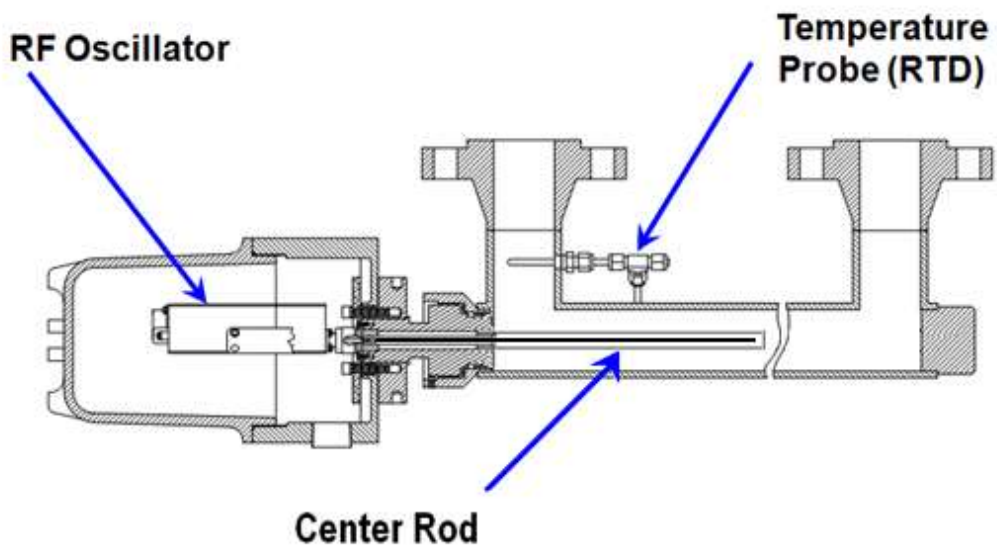

Figure 1.2

1.5. Electronics Enclosure Options

- Aluminum 3, 4, 5 or 6 Conduit Entries Explosion Proof Enclosures. 17.4 H x 14.0 W x 9.9 D Inches. 59 lbs. NEMA 4, 4X and 7. Class 1, Div 1, Groups C&D; EEx d IIB T5 89°C-IP66 (Optional)
- Stainless Steel 3, 4, 5 or 6 Conduit Entries Explosion Proof Enclosures. 15.3 H x 13.5 W x 9.8 D Inches. 195.2 Lb, NEMA 4, 4X and 7. Class 1, Div 1, Groups C&D; EEx d IIB T5 89°C-IP66 (Optional)
- Aluminum 8 Conduit Entries, 17.4 H x 14.0 W x 11.9 D Inches, 71 lbs, NEMA 4, 7 and 4X. Class 1, Div 1, Groups C&D; EEx d IIB T5 89°C-IP66 (Optional)
- Rain and Dust Tight Fiberglass Enclosure. 16.3 H x 10.5 W x 7.9 D Inches, 17 lbs, NEMA 4X.

1.6. Electronics

The electronics is based on a DSP programmed to read from the oscillator all the parameters needed to calculate the water cut of the fluid and to perform the control of the peripherals and the Flow Computer. The system is operated through 4 push buttons on the front panel with a 4 line LCD for visualization. A color touch screen is also available (optional). The touch screen can be operated from the

push buttons or from the screen itself. All the electronics is mounted on an aluminum chassis. The Components of the chassis are shown in figure 1.3

1. Motherboard with 2 relays and spare fuses (part number 2000-00072-000A)
2. 24VDC input board (Part Number 2000-00035-0000 or 100/240VAC power supply (Part Number 2070-00004-000)
3. Power supply board (Part number 2000-00069-000)
4. Processor board (Part number 2000-00066-000A)
5. Communications board (Part number 2000-00067-000A)
6. Analyzer board (Part Number 2000-00068-000E)
7. Optional analog input/output board (Part Number 2000-00070-000A)
8. Optional enclosure heater. 24 VDC 100W (Part Number 2050-00069-000) or 120 VAC 100W (Part Number 2050-00016-000) or 230 VAC 100W (Part Number 2050-00019-000)

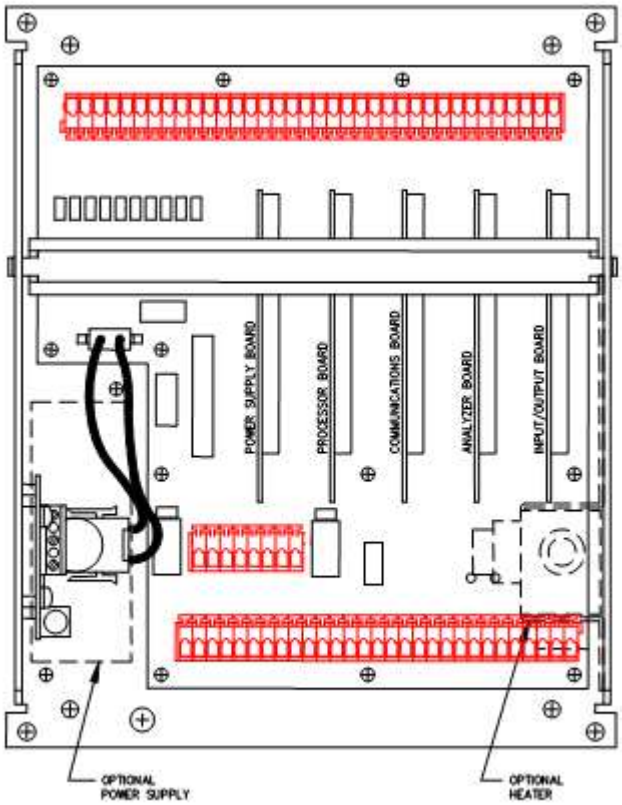

Figure 1.3

There are switches in some of the boards used for configuration purposes:

Processor Board: It has 8 switches in 2 groups of 4. They are for factory use only.

Analyzer Board: It has 8 switches in 2 groups of 4. They are used to configure the Pulse Input 1 and the Analog Output 1. Please section 2.6.1

Input Output Board: There are 12 switches in 3 groups of 4. They are used to configure the Pulse Inputs 2 and 3. Please see section 2.6.2

Communication Board: There are 16 switches in 4 groups of 4. They are used to set some termination, pull up and pull down resistors in each communication channel. Please see section 2.6.3.

Power Supply board: There are no switches in the Power Supply Board.

Display Board: There are 8 switches in 2 groups of 4. They are used to configure the screen mode and to enable the write protection mode. Please see section 4.

2. Installation

2.1. Pre-Installation notes

The Phase Dynamics analyzer is composed of a matched pair: A measurement section and the associated electronics. For this reason it is VERY important that the serial number on the white sticker that is over the microprocessor in the processor board, matches the serial number in the white sticker that is located at the side of the oscillator (The golden box inside the measurement section) and the serial number stamped in the measurement section. Picture 2.1 shows both stickers:

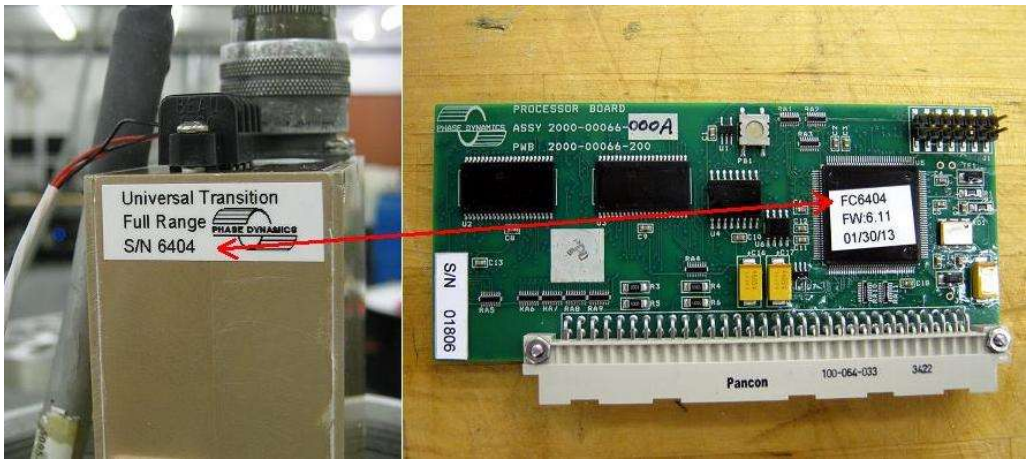

Picture 2.1

This assures that the processor board was programmed with the calibration curves of that pair "Oscillator/Measurement section".

ATTENTION:
Make sure the serial number of the Measurement Section and the Electronics match.

The place where the serial number is stamped in the measurement section depends on the model. On the "U" and "Z" models it is stamped at the bottom, on the "L" models is stamped on the collar and on the insertion models it is stamped on the flange as shown in the following picture 2.2.

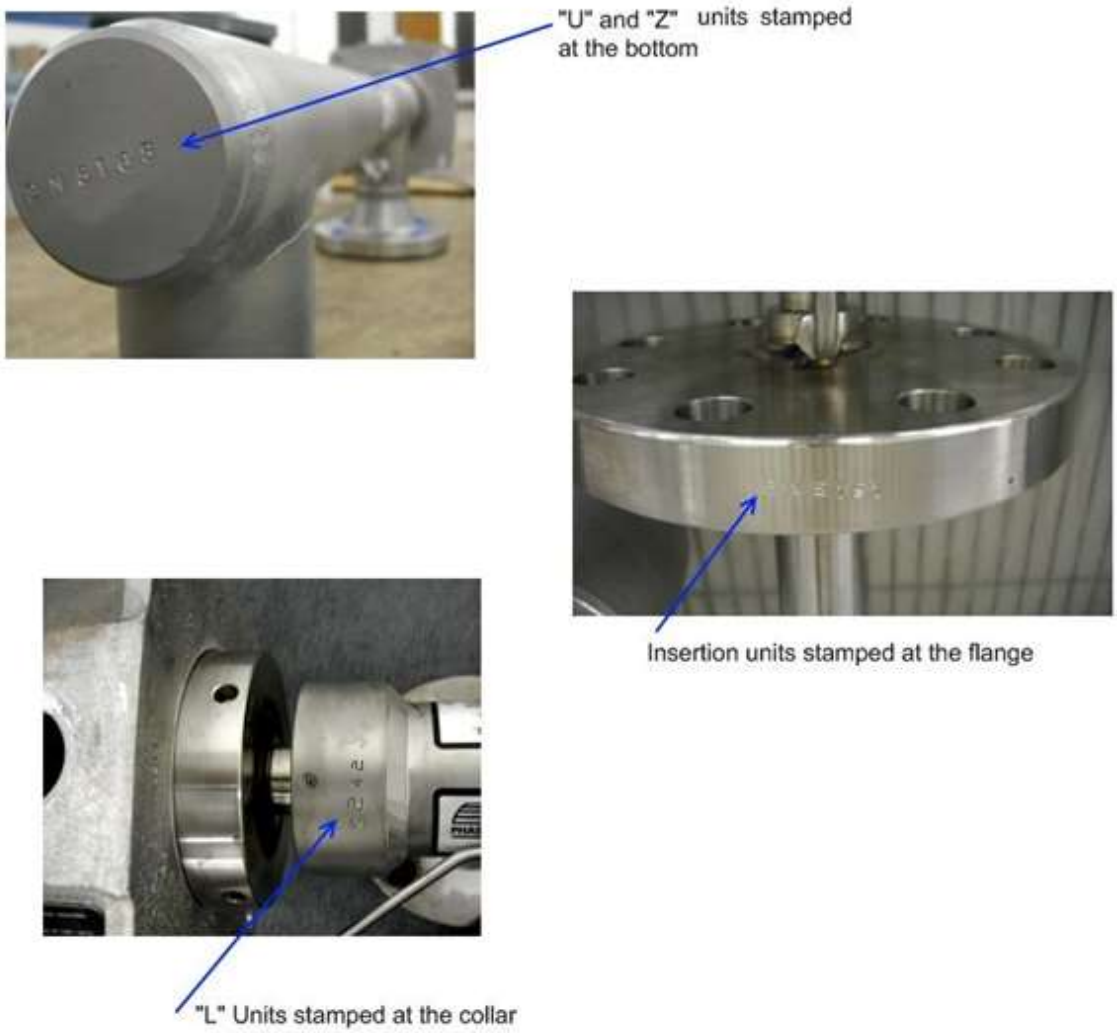

Picture 2.2

2.2. Measurement Section Mounting Considerations

There are three ways in which the Measurement Section can be installed: In a flow-through mode, in a fiscal by-pass mode where existing fast loops exist, and in an insertion mode:

ATTENTION:
Regardless of installation mode, the Analyzer **should** be **neither** the highest point **nor** the lowest point of the piping system. Being the highest point may contribute to the accumulation of gas, being the lowest point to the accumulation of water and/or sediments inside the Analyzer.

- **In the flow-through mode, the Measurement Section is the same diameter as the pipeline. Flow Through Analyzers are available in 2", 3" and 4" pipe sizes plus the insertion model. Full range analyzers do not come in the 1" size because at higher water percentages the emulsion size becomes a large fraction of the cross sectional area of the measurement section.**
- **In the by-pass type of installation, the Measurement Section is installed in parallel with the pipeline in an existing fast loop normally used for fiscal sample extraction and density measurement.**
- **The Full Range insertion model is inserted into 12" and larger pipelines. This system is not retractable under pressure as probes designed in this fashion are a safety and health hazard. The connecting flange size is always 3". Mid/High/Full Range Analyzers have a fixed probe length of 16.6" and can be installed in pipelines of 12" and up. It can also be installed in 6" pipeline or larger on a Long Radius Elbow only). This insertion units can also be mounted on pipelines 10" and larger at 45°.**

Wherever possible, a flow-through installation is preferred over a by-pass installation and in turn a by-pass installation over an insertion installation. Although the Analyzer performance is the same for each type of installation, there is a difference in the degree of confidence that can be obtained. In a flow-through Analyzer, the entire cross section of the flow to be measured is subject to the microwave field and therefore the measurement has the highest degree of confidence. The Insertion Analyzer has the microwave fields exposed to the fraction of the flow that is located inside the "cage" (the slotted part of the probe).

The following section will define more clearly some of the considerations for installation:

1. Regardless of installation mode, the Analyzer should be neither the high point nor the low point of the piping system. This prevents gas, oil, water or sand from accumulating and affecting good measurement. Being the high point may contribute to the accumulation of gas. Mounting in the low point can allow the accumulation of water and/or sediment inside the Analyzer.

2. The general recommendation for all flow regions where the product is well mixed (speeds greater that 2 ft/second or low water in very heavy viscous oil) is to mount the Analyzer horizontally, parallel to the ground, in the center plane of the pipeline. The goal is that everything which goes into the Analyzer can go back out. For low flow situations the analyzer is best located in the center of a vertical plane of piping with the flow from the bottom-up so that separated water does not reside unmixed and the analyzer cannot accumulate gas as in a vertical flowing downward situation. In this situation the water will distribute itself as it is being pushed upward and will give better performance than in a horizontal plane at low flow. Vertical flowing downward is also acceptable if no gas can accumulate in that leg and no waterfall effect can be created.

3. For a good measurement, every Analyzer needs to see a flow as homogeneously mixed as possible. A good mixture is usually guaranteed by a turbulent flow regime, and a minimum flow velocity of 2-3 feet/second is recommended. If the flow has a lower velocity, mixture needs to be obtained by some other means, such as installation near a pump, a valve or an elbow. Elbows can either help to mix or act as a separator depending upon viscosity and density of the oil. Static mixers are normally only used in pipelines with percentages of water below 5%. This is because the mixer requires a given range of flow rates in order to be effective. Low flow rates and mixers are not acceptable as there is no mixing in this case. In well testing and other higher water situations the mixer can flash gas due to the pressure drop across it.

4. To prevent possible vibration damage to the ceramic that covers the central conductor in Mid/High/Full Range Analyzers, we recommend that the maximum flow velocity not exceed 14

feet/second. If there is slugging and this velocity can be exceeded, it is best to install the analyzer so that the fluid is flowing into the pipe at the end of the ceramic (towards the electronics). In this fashion the cross section of the ceramic is small compared to flow from the side.

5. The normal connections are a "U" configuration ("in" and "out" flanges on the same side), a "Z" configuration ("in" and "out" flanges on opposite sides) or an "L" configuration ("in" and "out" flanges as an elbow). No one configuration is preferred over the other, and they can be chosen strictly to best fit the overall piping arrangement. The "L" pipe is generally more easily adapted to existing process arrangements.

6. There is no predetermined "in" and "out" to the Measurement section, and both flange connections can be used interchangeably. As mentioned previously in cases of slugging or high velocity flow rates, the flow should be towards the electronics.

7. Do not increase or decrease the line size to install a meter unless a pipeline size which is too large for the maximum flow rate is in place. In this case a smaller line size would provide good velocities to keep the mix and it would be acceptable to step down the line size from the mainline diameter. Again the velocity should not exceed 14 ft/second.

8. In cases of the by-pass installation, there must be enough pressure drop in the main pipeline to provide a reasonable flow rate in the bypass. A by-pass installation makes it possible to include isolation valves in the inflow and outflow legs of the by-pass, and thus to remove the Measurement Section from the process for purposes of inspection and repair.

9. For recommended installations of Insertion Analyzers please see our Drawings No. 0070-00226-000 for Mid/High/Full Range Analyzers. A critical issue in insertion installations is that the cage area is in full contact with the active flow. Insertion Analyzers are not available with flange ratings of Class 1500 and higher.

10. In the Mid/High/Full Range Insertion Analyzer cases make sure that the flow is always directed against the bottom of the Analyzer. This is to remove the concern that the area inside of the weldolet is flushed well by the oncoming fluids.

11. If free gas is present in the liquid stream of a flow-through or by-pass Analyzer, the "out" flange of the Analyzer should be mounted higher than the "in" flange, in order to allow the gas to escape the pipe section.

12. The only way to validate any Analyzer is to compare its readings with the result of samples analyzed in the laboratory. The sample port must be installed near the Analyzer. This sample port can be located either upstream or downstream of the Analyzer. Analyzer and sample port need to be close enough that the operator reading the Analyzer screen can communicate with the operator taking the sample. Long sample lines will bias the results.

13. The Electronics Enclosure should be mounted on a panel near the pipeline, about 5 feet above the ground. Ease of viewing, convenience of wiring, and simplicity of operation are the only considerations in the installation of the Electronics Enclosure. The distance between Measurement Section and Electronics Enclosure is limited by the length of the System Cable; the standard length is 30 feet, the maximum length available is 150 feet.

14. When used with process temperatures higher than 100 °C, the Measurement Section should be mounted vertically, with the oscillator enclosure being located at the bottom. This will allow the hot air to rise away from the oscillator electronics.

15. When prevailing ambient temperatures are above 100 °F, it is recommended that the Electronics Enclosure be protected by sun shade. Higher temperatures will not affect the performance of the Analyzer, but will reduce the life span of the electronic components.

16. When prevailing ambient temperatures are below 32 °F, it is recommended that the Electronics Enclosure be equipped with an internal heater. Lower temperatures will not affect the performance of the Analyzer, but will make the screen display unreadable. Install the Electronics Enclosure in such a way that it is not exposed to prevailing cold winds. If the ambient can go below freezing all process lines are typically insulated and/or heat traced. This is good engineering practice and the same guidelines should be followed for the analyzer.

2.2.1. Horizontal Installations

2.2.1.1. Flow-Through

In the flow-through mode, the Measurement Section becomes an equal diameter part of the pipeline. Flow-through Analyzers are available in 2”, 3” and 4” pipe sizes. Make sure the measurement section is mounted horizontally in the same plane that the pipeline. Mounted in this way, everything that goes in will come out (gas, water, sand, etc). The following examples are also valid for analyzers with “L” or “Z” configurations. Picture 2.3 shows the **correct** and two **incorrect** ways to mount them on a horizontal installation.

Correct	**Incorrect (Gas Trap)**	**Incorrect (Water Trap)**
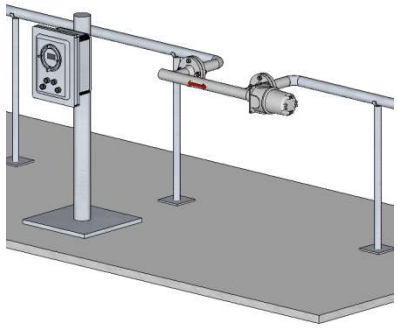	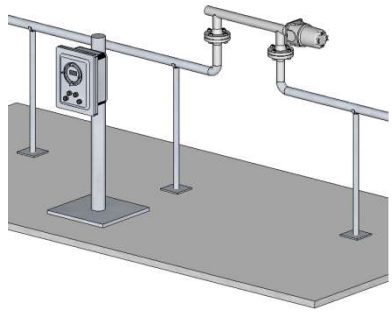	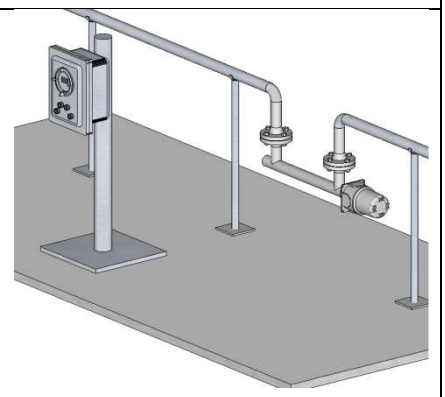

Figure 2.3

2.2.1.2. By-Pass

A **critical** issue in by-pass installations is that there is enough pressure drop in the main pipeline, between the “in” and “out” flanges of the Measurement Section in order to ensure an active flow in the by-pass line. We **recommend** an installation with Pitot tube (with Pitot tube reaching to center of pipe), since such an arrangement is recommended by API for sampling. The pressure drop can be also created by an orifice plate, a partially closed valve, an external pump, etc. The Measurement Section is installed in parallel with the pipeline. These examples also apply to analyzers with “L” or “Z” configurations. Picture 2.4 shows **the correct** and **two incorrect** ways to mount them

Correct	**Incorrect (Gas Trap)**	**Incorrect (Water Trap)**
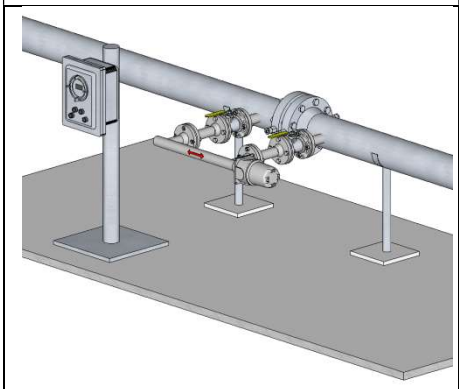	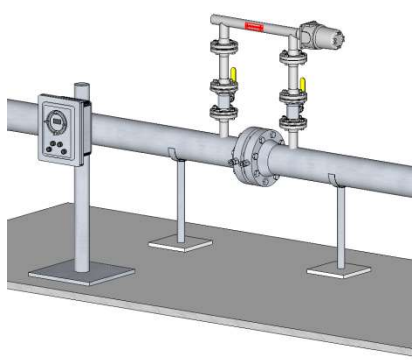	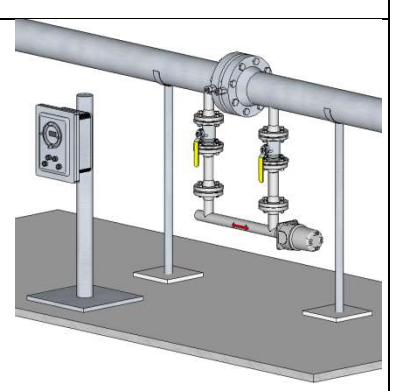

Picture 2.4

2.2.1.3. Insertion

A **critical** issue in insertion installations is that the active part of the Measurement Section be in full contact with the active flow.

The Insertion Measurement Sections are used in pipelines with diameters of 12 inches and larger. Check the dimensions in Section 12. This system is not retractable under pressure because probes designed in that fashion are a safety hazard. These analyzers are maintenance free therefore there is no need to remove them from the service. The connecting flange size is 3 inch. Picture 2.5 shows **the correct** and two **incorrect** ways to mount them on a horizontal pipe.

Correct	**Incorrect** (Gas Trap)	**Incorrect** (Water Trap)
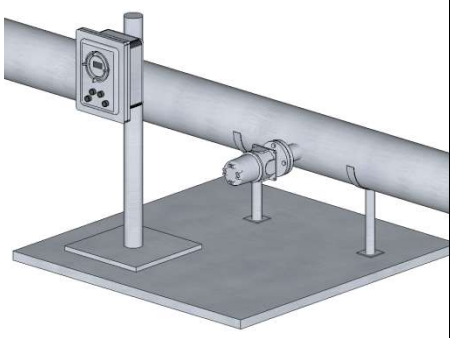	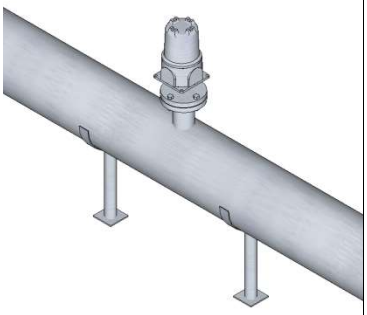	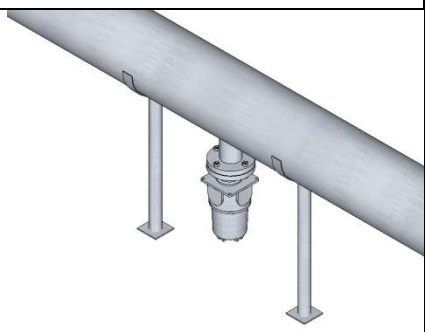

Picture 2.5

ATTENTION:

A **critical** issue in insertion installations is that the active section of the Measurement Section has to be in full contact with the active flow. Distance from the mounting flange and the interior of the pipe has to be no larger than 6 inches. See section 12 for dimensions

The insertion analyzer can also be mounted horizontally at 45 degrees on a 10” pipe or in an elbow in 6” pipes and larger. These two installations some times are the only way to properly mount them due to the mechanical dimensions of both the measurement section and the pipeline. For lines with a diameter of 4 inch or less, use flow through analyzers.

Picture 2.6 shows two more **correct** installations for Insertion Type Analyzers.

Correct Installation at 45 degrees	Correct Installation in an elbow
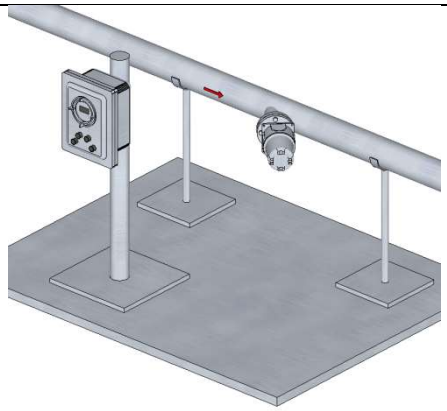	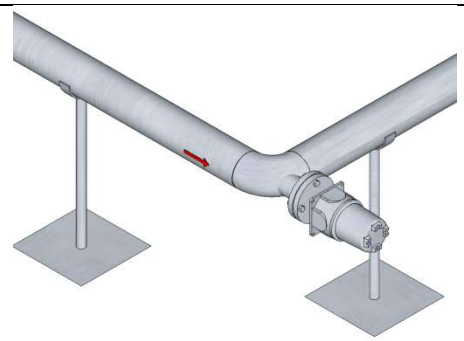

Picture 2.6

2.2.2. Vertical Installations

Vertical installations provide very good measurements. They are highly recommended when the flow speed is close or below 2 feet/second. The preferred flow direction is from bottom to top because it guaranties a liquid-full pipe condition.

2.2.2.1. Flow Through analyzers

The next examples are valid also for analyzers with “L” or “Z” configurations. Picture 2.7 shows examples of a **correct** installation and two **incorrect** ones.

Correct	**Incorrect (Gas Trap)**	**Incorrect (Water Trap)**
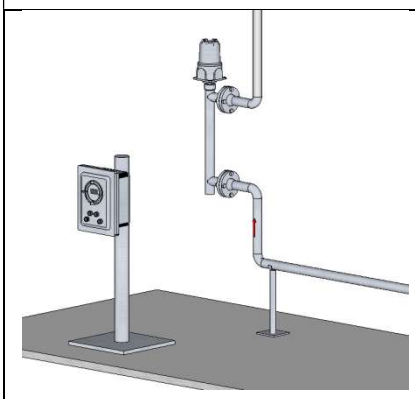	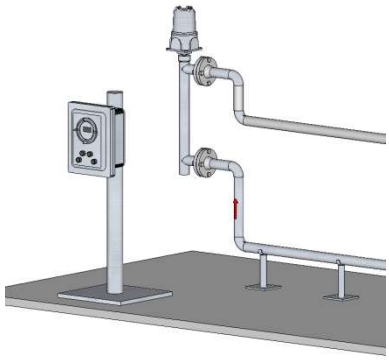	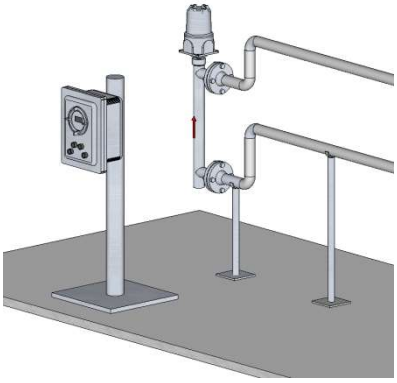

Picture 2.7

Picture 2.8 shows a typical “L” installation.

Correct only if the flow speed is always higher than 2 feet per second
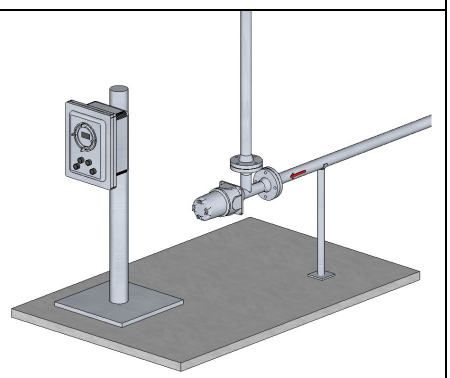

Picture 2.8

2.2.2.2. Insertion analyzers

A **critical** issue in insertion installations is that the active parts of the Measurement Section have to be in full contact with the active flow. Picture 2.9 shows two **correct** installations and one **incorrect** installation (Gas Trap)

Correct Installation	Correct Installation	**Incorrect installation (Gas Trap)**
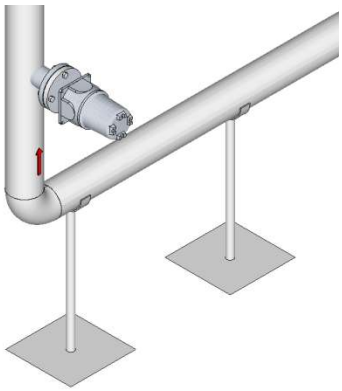	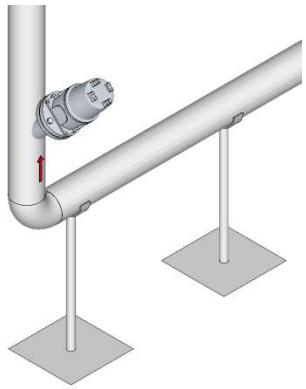	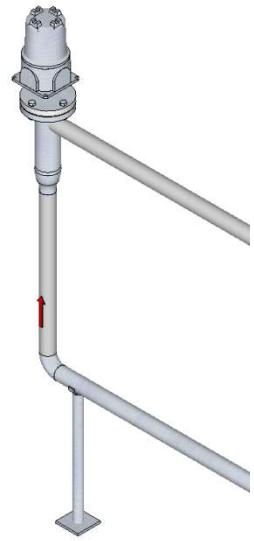

Picture 2.9

2.3. Sampling Port

Since the only way to validate Analyzers is to compare its readings with the result of samples analyzed in the laboratory. A sample port must be installed near the Analyzer. This sample port can be located either upstream or downstream of the Analyzer. Analyzer and sample port need to be close enough so that the operator reading the Analyzer screen can communicate with the operator taking the sample, and the flow regime is the same at the sample port and at the Analyzer. A recommended sample port is a bore through fitting welded to the pipeline with a one quarter inch tubing cut as a quilt inserted to the center of the flow. The sample valve should be a quarter turn ball valve to allow a good extraction flow rate. Figure 2.10 shows a typical Sample Port.

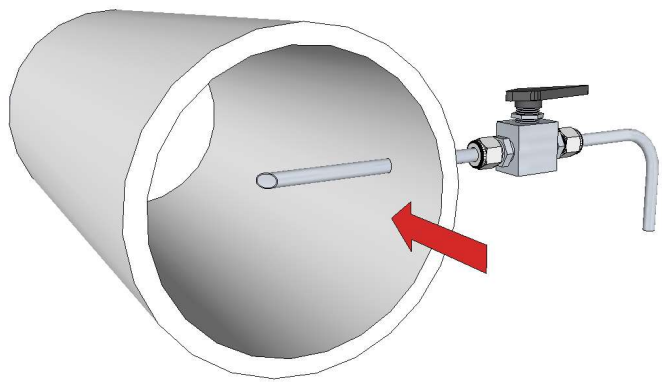

Figure 2.10

2.4. Electronics Enclosure

The Electronics Enclosure should be mounted on a panel near the pipeline, about 5 feet above the ground. Ease of viewing, convenience of wiring, and simplicity of operation are the only considerations in the installation of the Electronics Enclosure. The distance between Measurement Section and Electronics Enclosure is limited by the length of the System Cable; our standard length is 30 feet, the maximum length available is 150 feet.

When prevailing ambient temperatures are above 100 °F (37°C), it is **recommended** that the Electronics Enclosure be protected by sun shade. Higher temperatures will not affect the performance of the Analyzer, but will reduce the life span of the electronic components.

When prevailing ambient temperatures are below 32 °F (0°C), it is **recommended** that the Electronics Enclosure be equipped with an optional enclosure heater. Lower temperatures will not affect the performance of the Analyzer, but will make the screen display unreadable. Install the Electronics Enclosure in such a way that it is not exposed to prevailing cold winds.

2.5. Electrical Wiring

2.5.1. Power Supply Connections

There are two power supply options for the Phase Dynamics analyzer. DC (24 Volts) and AC (100 to 240VAC). The connections are different for each one of them. The power consumption of the unit is 16 Watts typical, 27 Watts Maximum for units with LCD display and 19Watts typical and 34 Maximum for units with Touch-screen and Expanded electronics. The gage of the wires has to be calculated to keep the voltage drop across the line to less than 5%.

2.5.1.1. 24VDC:

In this case there is a power input board with 3 terminals marked as +24 VDC, 24 VDC RETURN and EARTH GROUND, as shown in picture 2.11. The wire gages accepted by the terminal strip are 14 to 22 AWG. Next to the terminal strip, there is a fuse holder. This fuse protects the system and it can be removed to power off the analyzer. **The connection of a non-interrupted earth ground on the EARTH GROUND connection is mandatory**. The power surge protections on the input board will not work if this grounding connection is not provided. This ground connection also protects the user from electroshock hazard. The power requirements are: 24 VDC +/- 5%, 0.625A Typical and 1.125A Maximum and 0.8A typical and 1.45A Maximum for touch-screen with Expanded electronics.

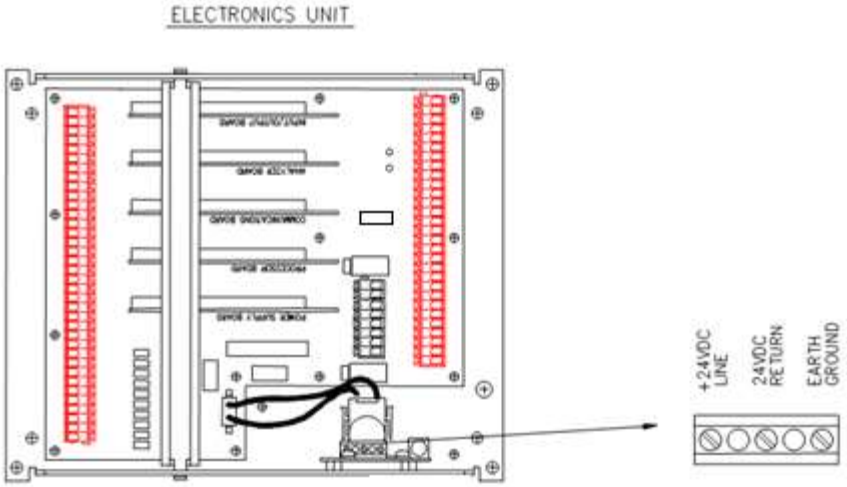

Picture 2.11

Warning:
An uninterruptible safety Earth Ground MUST BE provided from the main power source to the Power input board terminal marked Earth Ground.

2.5.1.2. 100 to 240 VAC:

In this case there is a power supply mounted on the bottom left corner of the electronics enclosure. The power supply is multi-voltage. It can be fed with voltages ranging from 100 and 240 VAC. There are three terminals on the power supply marked as L (Line), N (Neutral) and GND (Ground) and one Green Ground Screw on the chassis as shown in the figure 2.12. The wire gages accepted by the terminals are

14-18 AWG. A circuit breaker or fuse has to be provided by the customer on the other end of the feed line. Failure to provide EARTH GROUND to the power supply terminal and to the chassis may cause a shock hazard that could result in personal injury. Also, the instrument may be damaged and will not operate properly and the warranty will be voided.

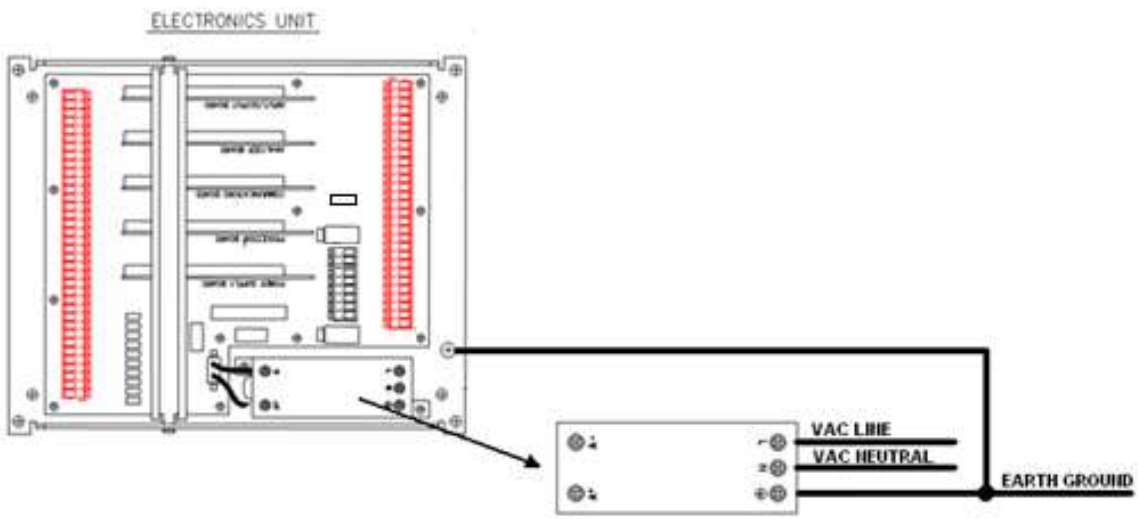

Picture 2.12

WARNING:
An uninterruptible safety Earth ground MUST BE provided from the main power source to the Power input terminal marked Earth Ground and to the Chassis.

2.5.1.3. Earth Ground Connection between the Electronics Enclosure and the Measurement Section.

There is a ground kit provided with the analyzer. This kit contains a 16 AWG ground wire that has to be installed between the electronics enclosure and measurement section enclosure of the Phase Dynamics analyzer system. The wire provides a secondary ground connection between the two enclosures, and must be installed as described below. This assures a good ground. Metal Conduit is not accepted as a ground connection because it can become corroded with time.

Parts Contained

- 16 AWG green ground wire, with lug for #10 screw installed on one end
- #10-24 screw
- #10 lock washer
- crimp lug for ¼" screw
- ¼" lock washer

Installation Instructions

a) Attach the ground wire to the collar inside the measurement section enclosure, as shown in the drawing below, using the #10-24 screw and lock washer.
b) Pull the other end of the ground wire through the conduit (user supplied) connecting the two enclosures. It may be most convenient to perform this operation when the main system cable is installed, pulling the ground wire and system cable through the conduit at the same time.
c) Cut the ground wire to length, and strip the insulation from the end.
d) Crimp the lug for ¼" screw onto the ground wire and install this lug under the ¼" ground screw which is located inside the electronics enclosure, using the ¼" lock washer. See Pictures 2.13 and 2.14

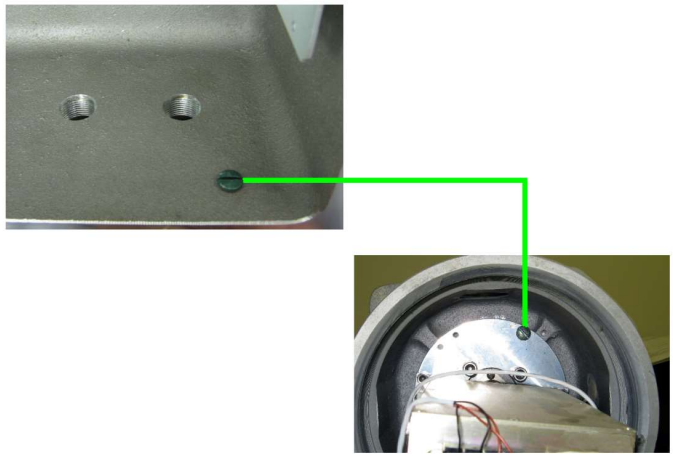

Picture 2.13: Detailed picture of the ground cable terminals

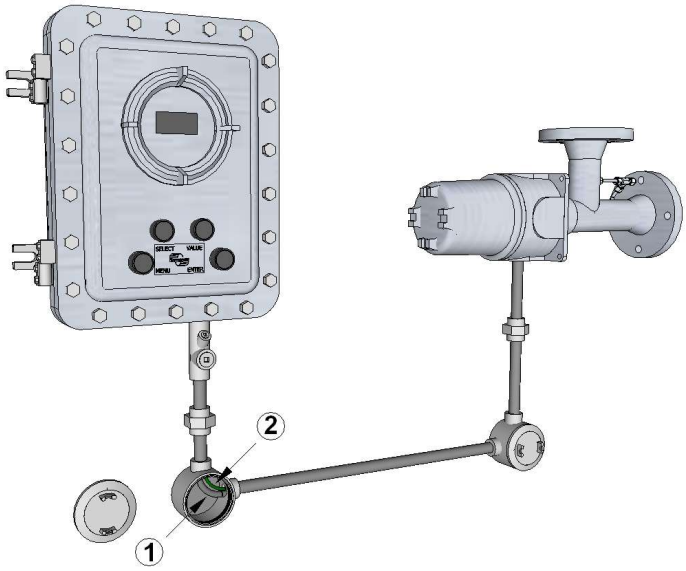

Picture 2.14: System Cable: (1) – Ground Cable: (2)

2.5.2.

2.5.3. System Cable Connection

The system cable is used to connect the Electronics Enclosure with Measurement Section. For the explosion-proof installations, a special electrical conduit is required. A factory-installed circular military type of connector is attached to one end of the cable while the other end requires stripping the individual wires. This circular connector fits through the threaded hole of the enclosure protecting the oscillator module and then is connected to the mating circular connector at the rear of the oscillator module. Typically 30 feet of system cable is supplied to connect the analyzer to the measurement section. If required, longer system cables (up to 150 feet) are available from Phase Dynamics. Phase Dynamics recommends the use of one single cable; DO NOT splice cables together. The wires on the other end have to be connected to the terminal strip J11 in the Electronics Enclosure, according to the following table:

System Cable Wiring Table

Wire Color	***Terminal Number***	***Terminal Strip***	***Terminal Label***	***Function***
White/Yellow	13	J11	EXTUNE	External Tune Selection
White/Green	14	J11	VTUNE	Tuning Voltage
Yellow	15	J11	OSCSEL	Oscillator select
Drain wire from White/Red-White/Orange pair	16	J11	GND	Ground
White/Red	17	J11	FREQ+	Oscillator frequency +
White/Orange	18	J11	FREQ-	Oscillator frequency -
White/Brown	19	J11	P+	RTD drive high
White	20	J11	P1	RTD sense high
Grey	21	J11	P2	RTD sense low
Violet	22	J11	P3	RTD drive low
Blue	23	J11	VREF	Reflected power
Green	24	J11	VINC	Incident power
Brown	25	J11	GNDSEN	Ground Sense
Orange	26	J11	HTR	Heater voltage
White/Black	27	J11	HTR RTN	Heater Return (Ground)
Red	28	J11	+15VDC	+15 VDC supply
Black and Drain wire from Brown-White/Green pair	29	J11	GND	Ground
White/Blue	N/A	N/A	N/A	Not Used (Cut Short)
White/Violet	N/A	N/A	N/A	Not Used (Cut Short)
White/Gray	N/A	N/A	N/A	Not Used (Cut Short)
Drain from White/Violet &White Grey	N/A	N/A	N/A	Not Used (Cut Short)

Picture 2.15 shows the wiring of the System Cable on Terminal Strip J11

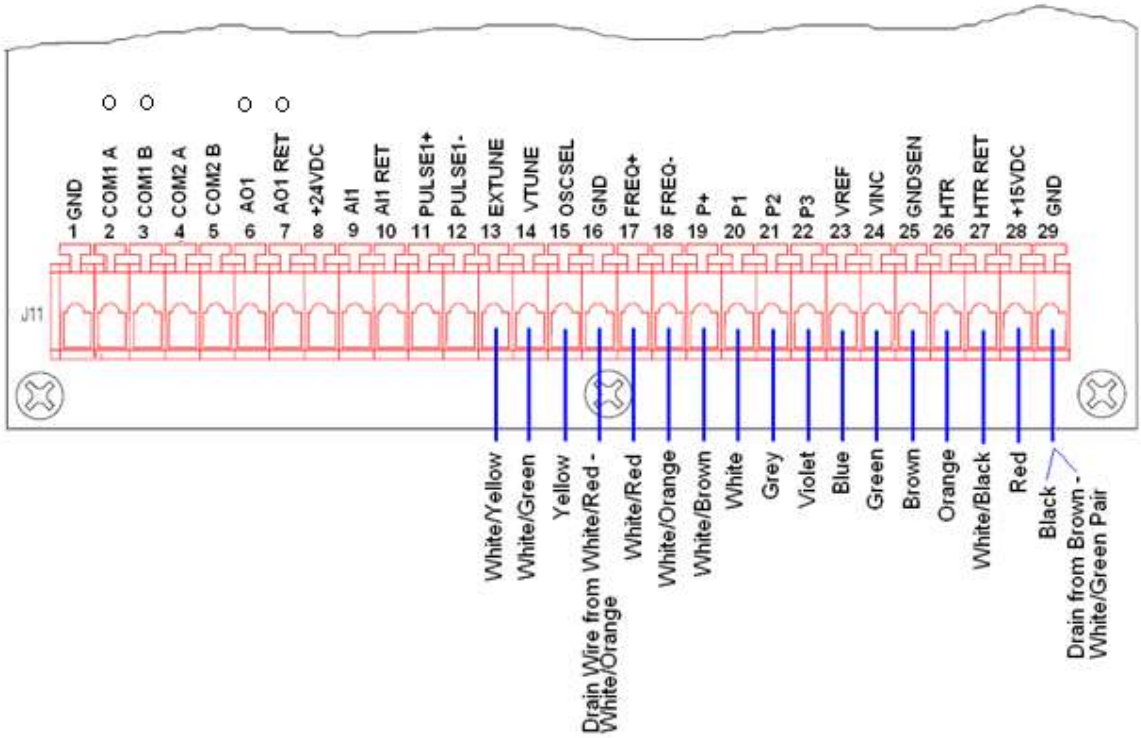

Picture 2.16

2.5.4. RTD Connections

Each Phase Dynamics analyzer is equipped with a 4-wire RTD to measure the process temperature. These wires are connected at the factory. In case of a malfunction (wrong temperature indication), verify that the wires of the temperature probe are connected properly, as shown in figure 2.16, to the terminal strip at the top of the oscillator module according to the following table:

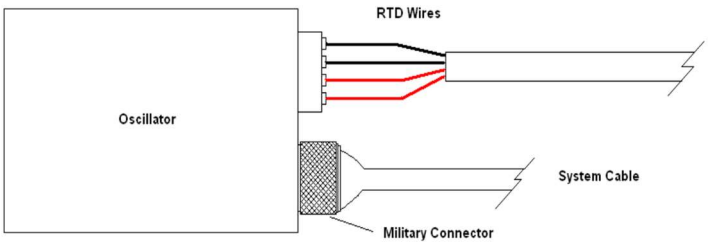

Terminal Name	Wire Color
P+	Red
P1	Red
P2	Black
P3	Black

Figure 2.16

See section 9 to troubleshoot the RTD.

2.5.5. Electronic Enclosure Heater Connections

This optional heater assembly is used in cold environments to maintain a minimum temperature of 32°F inside the Phase Dynamics electronics enclosure. The heater features an on-off automatic thermostat that turns on the heater when the internal temperature is below 40°F.

There are three types of power supply to choose. 230VAC (Fig. 2.17), 120VAC (Fig. 2.18) and 24VDC (Fig. 2.19). All of them are rated 100W. The unit is already assembled in the Electronic Enclosure; the only requirement for the connection is to attach the wires to the heater assembly terminal block as shown in the drawings below. The size of the wires should be calculated properly to not produce a voltage drop higher than 5% across the line. The wire gages accepted by the connector are 22 to 12 AWG. Phase Dynamics don't wire these enclosure heaters because it is up to the customer the way to connect them. For example if a separate breaker or fuse is needed for the enclosure heater to allow the power to be shut off independently, then a separate line has to be brought to feed the enclosure heater. If no independent breaker or fuse is necessary and the voltage of the Analyzer matches the voltage of the enclosure heater, then the power wires can be split inside the enclosure to power both with the same line.

The heater assembly is internally fused at 1 ampere, 2 amperes or 8 amperes for 230VAC, 120VAC or 24VDC respectively. Other values should not be substituted.

The heater assembly is mechanically attached to the chassis which is already grounded so no ground connection is necessary.

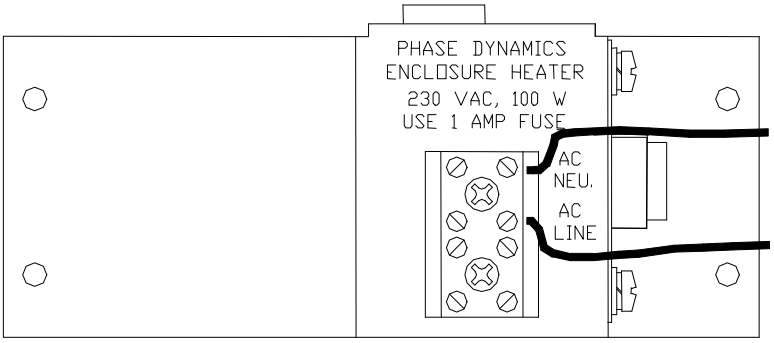

Figure 2.17 - 230 VAC Enclosure Heater Terminal Block

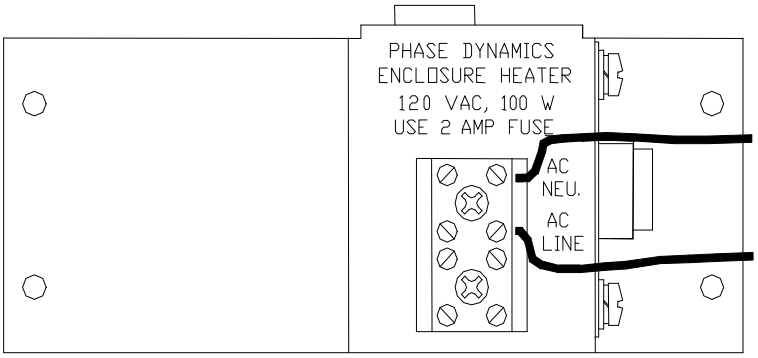

Figure 2.18 - 120 VAC Enclosure Heater Terminal Block

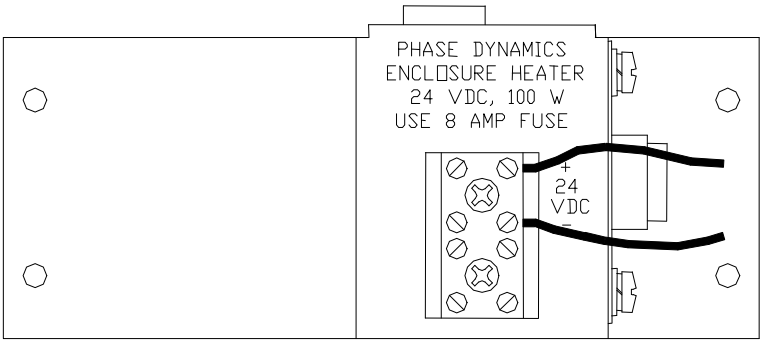

Figure 2.19 - 24 VDC Enclosure Heater Terminal Block

2.6. Signals Wiring

The wire gages accepted by the terminal Strip J1, J3 and J11 are 12 to 28 AWG.

2.6.1. Analog Inputs and Outputs

ATTENTION:

The analog Inputs and Outputs are NOT ISOLATED. The analog Outputs are INTERNALLY POWERED (Also called Self Powered or Active).

The analyzer has 1 Analog Input and 1 Analog Output (Enhanced Model) or 5 Analog Inputs and 5 Analog Outputs (Expanded Model). Each analog input has a +24VDC terminal associated that can be used to power field devices. These power supplies are individually fused. The Inputs and Outputs are also fused. The corresponding fuses are located in the Analyzer Board for Analog Input/Output 1 and in the Input/Output board for Analog Inputs/Outputs 2 to 5. All the analog outputs are active (internally powered) so no external power supply is required to use them.

The terminals of all the analog inputs/outputs are described in the following table: (Note: I/O Board means Input/Output Board and A. Board means Analyzer Board).

Description	Terminal Strip	Terminal Number	Terminal Label	Fuse Location	Fuse number/ Amperage
Analog Output 1 (+)	J11	6	AO1	A. Board	F7/0.125A
Analog Output 1 (-)	J11	7	AO1 RET	Not Fused	
Analog Input 1 (+) 24VDC Supply	J11	8	+24VDC	A. Board	F1/0.125A
Analog Input 1 (+)	J11	9	AI1	A. Board	F9/0.125A
Analog Input 1 (-)	J11	10	AI1 RET	Not Fused	
Analog Input 2 (+ 24VDC Supply	J1	9	+24VDC	A. Board	F16/0.125A
Analog Input 2 (+)	J1	10	AI2	I/O Board	F12/0.125A
Analog Input 2 (-)	J1	11	AI2 RET	Not Fused	
Analog Input 3 (+ 24VDC Supply	J1	12	+24VDC	I/O Board	F15/0.125A
Analog Input 3 (+)	J1	13	AI3	I/O Board	F10/0.125A
Analog Input 3(-)	J1	14	AI3 RET	Not Fused	
Analog Input 4 (+) 24VDC Supply	J1	15	+24VDC	I/O Board	F14/0.125A
Analog Input 4 (+)	J1	16	AI4	I/O Board	F8/0.125A
Analog Input 4 (-)	J1	17	AI4 RET	Not Fused	
Analog Input 5 (+) 24VDC Supply	J1	18	+24VDC	I/O Board	F13/0.125A
Analog Input 5 (+)	J1	19	AI4	I/O Board	F8/0.125A
Analog Input 5(-)	J1	20	AI4 RET	Not Fused	
Analog Output 2 (+)	J1	21	AO2	I/O Board	F24//0.125A
Analog Output 2(-)	J1	22	AO2 RET	Not Fused	
Analog Output 3(+)	J1	23	AO3	I/O Board	F22/0.125A
Analog Output 3(-)	J1	24	AO3 RET	Not Fused	
Analog Output 4(+)	J1	25	AO4	I/O Board	F20/0.125A
Analog Output 4(-)	J1	26	AO4 RET	Not Fused	
Analog Output 5(+)	J1	27	AO5	I/O Board	F18/0.125A
Analog Output 5(-)	J1	28	AO5 RET	Not Fused	

Figure 2.20 shows the wiring diagrams for the Analog Input/s and Output/s

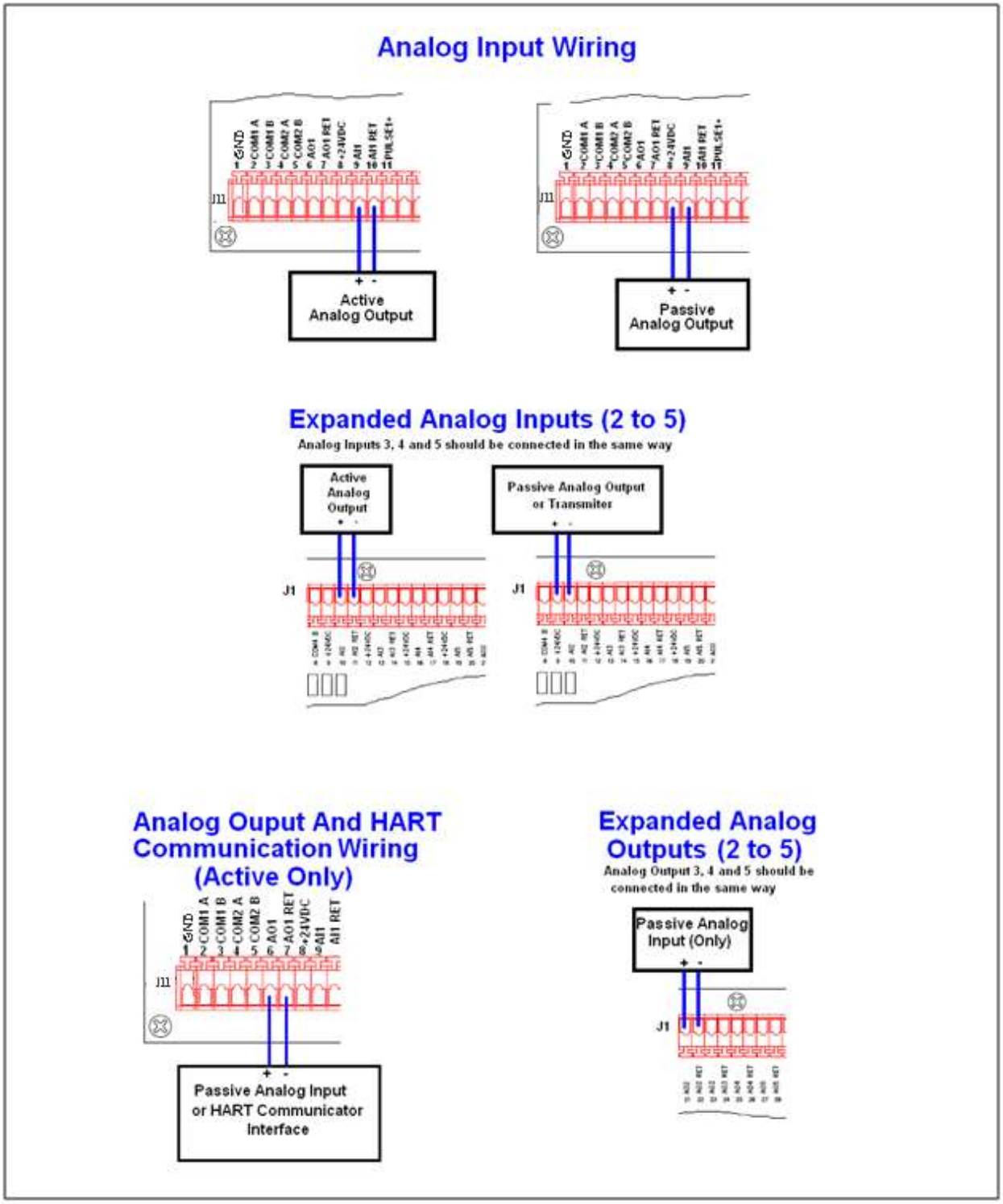

Figure 2.20

There are 8 switches arranged in 2 groups of 4 on the Analyzer Board. Figure 2.21 shows the default position of these switches. Two of them are used to configure the Analog Output 1. They are the switches S2-3 and S2-4.

S2-3: AO1 TERMINATION: When this switch it turned on (up position) a 500 Ohms termination resistor is connected in parallel with the Analog Output line. This switch is only use with HART communications established on the Analog Output 1 and it is used to avoid ringing in the line when there are more than one instrument communicating over the same line and/or when the line is too long. If this switch is turned on, then S2-4 should be turned off. The default position for this switch is OFF.

S2-4: AO1 ENABLE: This switch enable the Analog Output 1. When more than one analyzer is connected on the same line the AO1 can be disabled allowing only the HART® communication signal to be present. In this way the 4-20mA signal will NOT be present. The default position for this switch is ON.

Figure 2.21

2.6.2. Pulse Inputs

The analyzer has 1 Pulse Input (Enhanced Model) or 3 Pulse Inputs (Expanded Model). The pulse inputs are fused. The fuse for the Pulse Input 1 is in the Analyzer Board. The fuses for the Pulse Inputs 2 and 3 are located in the Input/Output board.

The wiring instructions are shown in the figure 2.22 and 2.23. The connections are located on terminal strips J1 and J11 according to the following table: (Note: I/O Board means Input/Output Board and A. Board means Analyzer Board)

Description	Terminal Strip	Terminal Number	Terminal Label	Fuse Location	Fuse number/Amperage
Pulse Input 1 (+)	J11	11	PULSE1+	A. Board	F5/0.125A
Pulse Input 1 (-)	J11	12	PULSE1-	A. Board	Not Fused
Pulse Input 2 (+)	J1	29	PULSE2+	I/O Board	F4/0.125A
Pulse Input 2 (-)	J1	30	PULSE2-	I/O Board	Not Fused
Pulse Input 3 (+)	J1	31	PULSE3+	I/O Board	F4/0.125A
Pulse Input 3 (-)	J1	32	PULSE3-	I/O Board	Not Fused

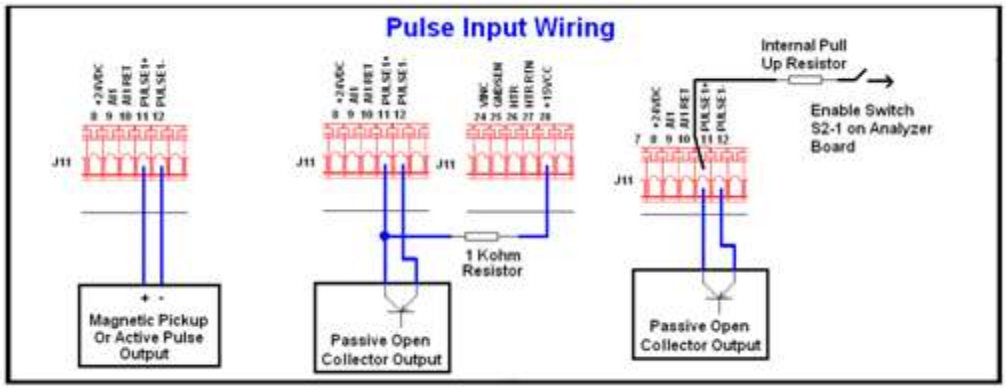

Figure 2.22

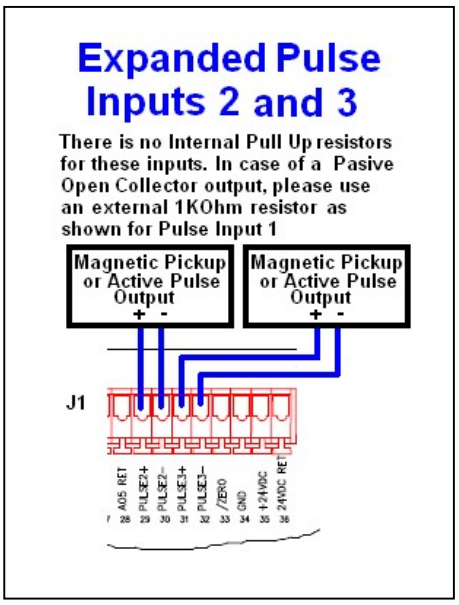

Figure 2.23

There are switches to configure the Pulse inputs. For the Pulse Input 1 they are in the Analyzer Board. For the Pulse Inputs 2 and 3, they are in the optional Input/Output board.

There are 8 switches in the Analyzer Board. 6 of them are used to enable filters and Pull Up and Down 10KOhms resistors. The other 2 switches are used to configure the Analog Output 1. The figure 2.24 shows the default position of these switches.

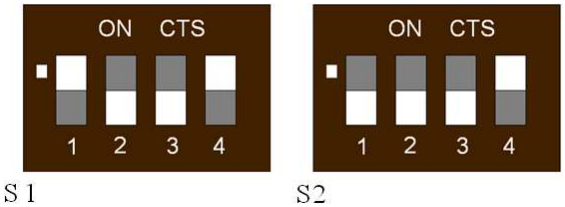

Figure 2.24

The following tables show the function of each switch:

	S1-1	S1-2	S1-3	S1-4
Filter	0 (Down)	1(Up)	1(Up)	0 (Down)
No filter	1(Up)	0 (Down)	0 (Down)	1(Up)
Pulse Disabled	0 (Down)	0 (Down)	0 (Down)	0 (Down)

S2-1	S2-2	S2-3	S2-4
10 KOhms Pull Up Resistor	10 KOhms Pull Down Resistor	Used for AO1	Used for AO1

There are 12 switches in the Input/output board organized in three groups as shown in figure 2.24. The group marked as S1 and S2 are filters/enable switches as shown in the following tables.

Group S1- Pulse Input 2				
	S1-1	S1-2	S1-3	S1-4
Filter	0 (Down)	1(Up)	1(Up)	0 (Down)
No filter	1(Up)	0 (Down)	0 (Down)	1(Up)
Disable	0 (Down)	0 (Down)	0 (Down)	0 (Down)

Group S2 - Pulse Input 3				
	S2-1	S2-2	S2-3	S2-4
Filter	0 (Down)	1(Up)	1(Up)	0 (Down)
No filter	1(Up)	0 (Down)	0 (Down)	1(Up)
Disable	0 (Down)	0 (Down)	0 (Down)	0 (Down)

The switches in group S3 are 10KOhms Pull Up and Pull down resistors. The following table shows the function of each switch.

Group S3			
S3-1	S3-2	S3-3	S3-4
Pulse Input 2 Pull Up Resistor	Pulse Input 2 Pull Down Resistor	Pulse Input 3 Pull Up Resistor	Pulse Input 3 Pull Down Resistor

The figure 2.25 shows the default position of the switches on the Input/Output board.

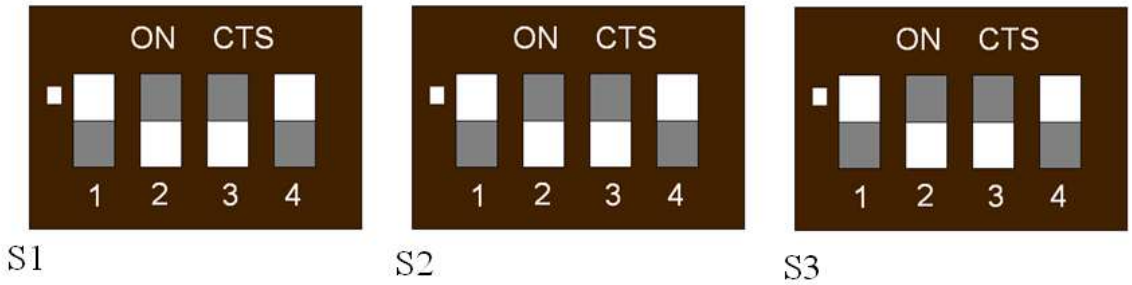

Figure 2.25

2.6.3. Communication Ports

The analyzer has four RS485 ports with MODBUS® RTU protocol. Port 1and 2 are always slaves and they are normally used for communication with SCADA systems. When the analyzer has an optional Touch-Screen, Port 2 becomes unavailable to the user.

The function of the ports number 3 and 4 depends on the application. For example, they can be used to connect the analyzer to a Micro Motion® Coriolis Meter in applications such as CCM (Compact Cyclone Meters). When they are not use to read Micro Motion® Meters, they are also slaves.

Description	Terminal Strip	Terminal Number	Terminal Label
Communication Port 1 (A)	J11	2	COM1 A
Communication Port 1 (B)	J11	3	COM1 B
Communication Port 2 (A)	J11	4	COM2 A
Communication Port 2 (B)	J11	5	COM2 B
Communication Port 3(A)	J1	1	COM3 A
Communication Port 3 (B)	J1	2	COM3 B
Communication Port 3 (A)	J1	3	COM3 A
Communication Port 3 (B)	J1	4	COM3 B
Communication Port 4 (A)	J1	5	COM4 A
Communication Port 4 (B)	J1	6	COM4 B
Communication Port 4(A)	J1	7	COM4 A
Communication Port 4 (B)	J1	8	COM4 B

The default configuration for the ports is described in the Section 4.32. The wiring of the communication ports is summarized in figure 2.26

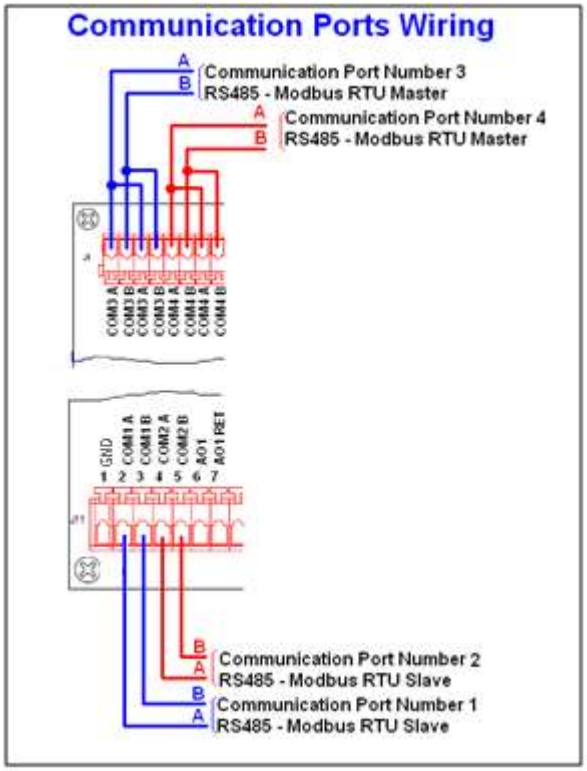

Figure 2.26

There are 16 switches in the Communication Board. They are arranged in 4 groups called S1, S2, S3 and S4. There is one group per communication channel. They are Termination Resistors and Pull Up and Pull Down resistors. One of the switches in each group is not used. The figure 2.27 shows the default position of all these switches.

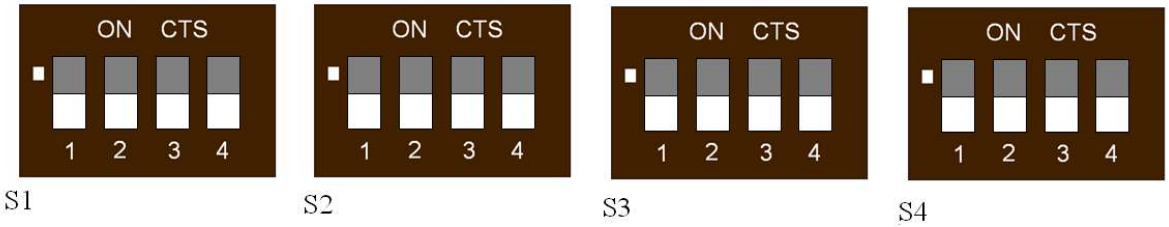

Figure 2.27

The following table shows the function of every switch.

Communication port 1 to 4			
Sx-1	Sx-2	Sx-3	Sx-4
100 Ohms Termination Resistor	600 Ohms Pull Up Resistor	600 Ohms Pull Down Resistor	Not Used

2.6.4. Relays

The analyzer has two configurable relays with one SPDT switch each. They have their own terminal strip (J3). The contacts are individually fused. The fuses are F1 and F2 (See figure 2.28). The contacts are rated 1A 125VAC.

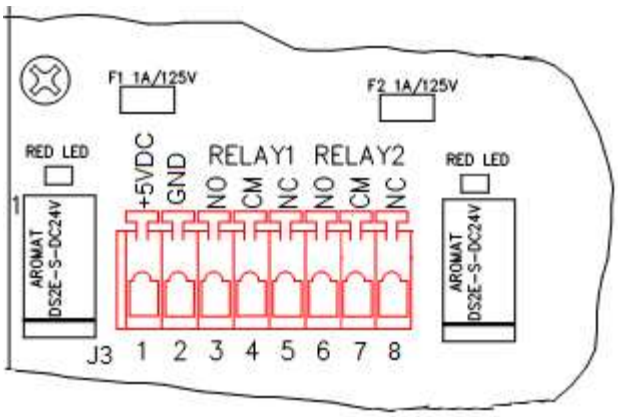

Figure 2.28

The connections are specified in the following table:

Description	Terminal Strip	Terminal Number	Terminal Label
+5VDC	J3	1	+5VDC
Ground	J3	2	GND
Relay 1 Normal Open Terminal	J3	3	NO
Relay 1 Common Terminal	J3	4	CM
Relay 1 Normal Closed Terminal	J3	5	NC
Relay 2 Normal Open Terminal	J3	6	NO
Relay 2 Common Terminal	J3	7	CM
Relay 2 Normal Closed Terminal	J3	8	NC

2.6.5. HART® Port (Optional)

The Phase Dynamics analyzer has an optional HART® BELL202 network. The HART signal is present over the Analog Output 1. The Analog output 1 is **not** galvanically isolated.

The HART terminals are located on 2 test clips over the mother board and on the Analog Output 1 (Terminals 6(+) and 7(-) on terminal strip J11).

The maximum allowable loop resistance is 600Ω.

The port has fuse protection (Fuses on Analog Output 1), ESD protection, and transient voltage suppression. For wiring of the Analog Output 1, please refer to the figure 2.29 or see section 2.6.1.

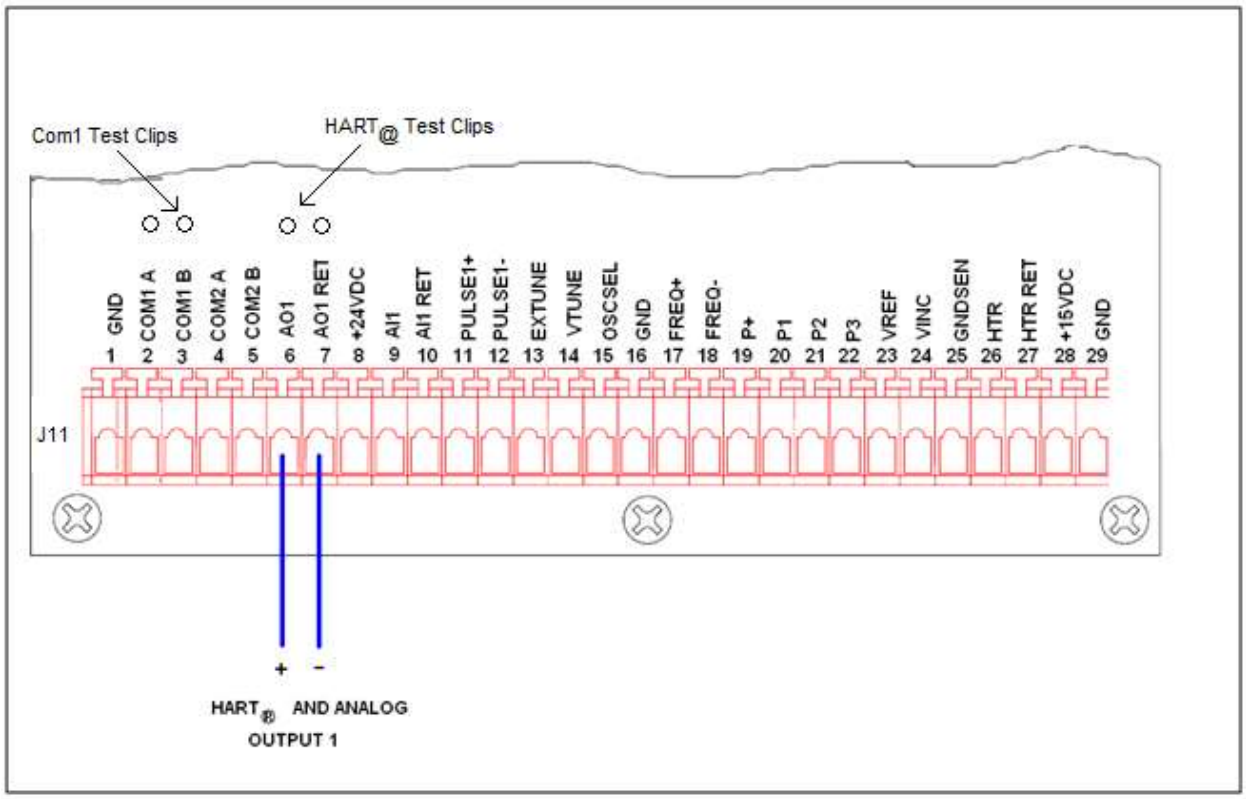

Figure 2.29

There are 8 switches in the Analyzer Board arranged in two groups of 4 that are used in some special cases to configure the HART® network. They are marked as S1 and S2 (figure 2.30)
For HART® the only ones used are S2-3 and S2-4.

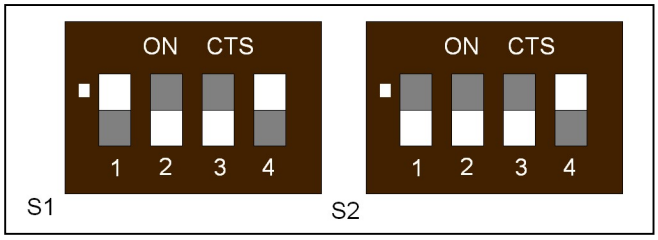

Figure 2.30

S2-3: AO1 TERMINATION: When this switch it turned on (up position) a 500 Ohms termination resistor is connected in parallel with the Analog Output line. This is used to avoid ringing in the line when there are more than one instrument communicating over the same line and/or when the line is too long. If this switch is turned on, then S2-4 should be turned off. The default position for this switch is OFF.

S2-4: AO1 ENABLE: This switch enable the Analog Output 1. When more than one analyzer is connected on the same line the AO1 can be disabled allowing only the HART® communication signal to be present. In this way the 4-20mA signal will NOT be present. The default position for this switch is ON.

3. Theory of Operation

The Phase Dynamics analyzers work under a principle called "Load Pull". An oscillator is physically connected to the probe. The frequency of such oscillator is related to the water content of the process.

The hydrocarbon emulsions may exist in two phases:

a) Oil containing drops of water: Usually called Oil Phase or Oil Continuous Phase
b) Water containing drops of Oil: Usually called Water Phase or Water Continuous Phase.

The behavior of the microwaves is different for each phase. For this reason the Phase Dynamics Full Range analyzers have two microwave oscillators. One specially designed for the Oil Phase and one specifically designed for the Water Phase. They are often referred as the Oil and Water Oscillators. They are connected to the probe sequentially once a second.

3.1. Oil Oscillator Calibration

During factory calibration, every single Full Range and Mid Range analyzer is calibrated on the oil phase from 0% water to inversion at constant temperature. Inversion is the point where the emulsion flips from Oil Phase to Water Phase. In hydrocarbons this happens at about 78~80% water. The Figure 3.1 shows a typical Oil Phase Calibration where the relation between Frequency and Water Cut can be observed.

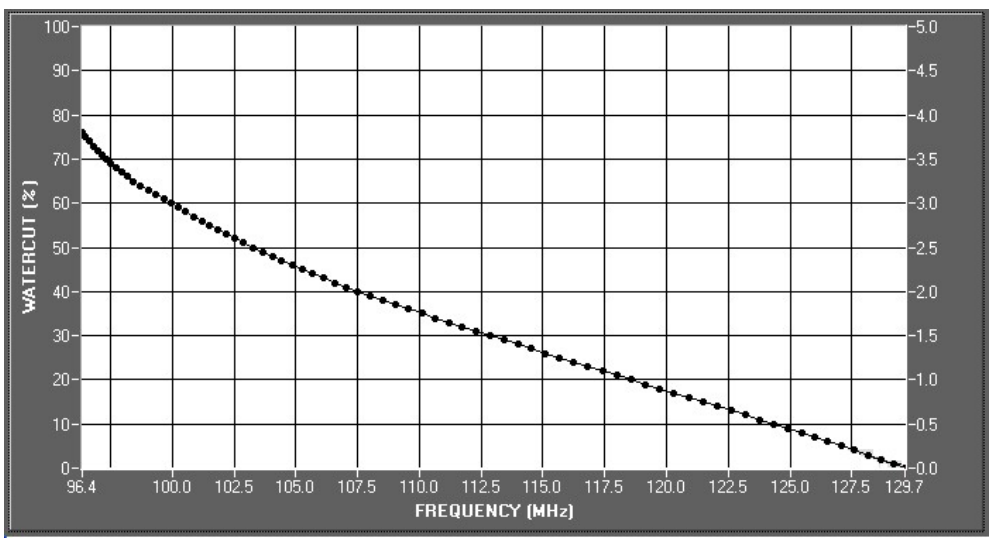

Figure 3.1

3.2. Water Oscillator Calibration

Every single Full Range analyzer is calibrated on the water phase (60 to 100% water). The water phase calibration consists of several calibrations done with water containing different salinities. The figure 3.2 shows a typical Water Phase Calibration. In this case for water with concentrations of NaCl of 0.1%, 0.2%, 0.3%, 0.5%, 1%, 1.5%, 2%, 3% and 5% by weight and water cut going from 100 to 60%.

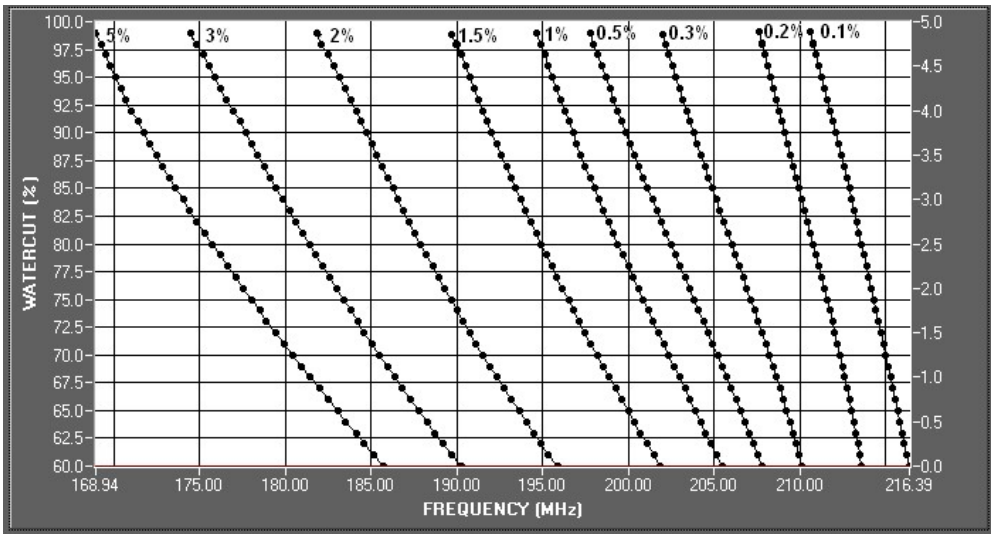

Figure 3.2

The data obtained during calibration is then converted into equations that are loaded into a flash memory in the Processor Board. The temperature of the process is measured continuously with a RTD to correct the calculated water cut by temperature.

3.3. Phase Detection

At times, two emulsions, one Oil Continuous and one Water Continuous, with significantly different water contents, may give the same measured frequency of the load-pull system. The actual phase is detected by a routine that checks for frequency boundaries called Oil Lo, Oil Hi, Water Lo and Water Hi plus an extra parameter that is also needed to determine the phase: The Oil Oscillator Reflected Power.

Water Continuous emulsions yield much lower reflected power levels than Oil Continuous emulsions because the energy is dissipated through the conductive water, as shown in the figure 3.3.

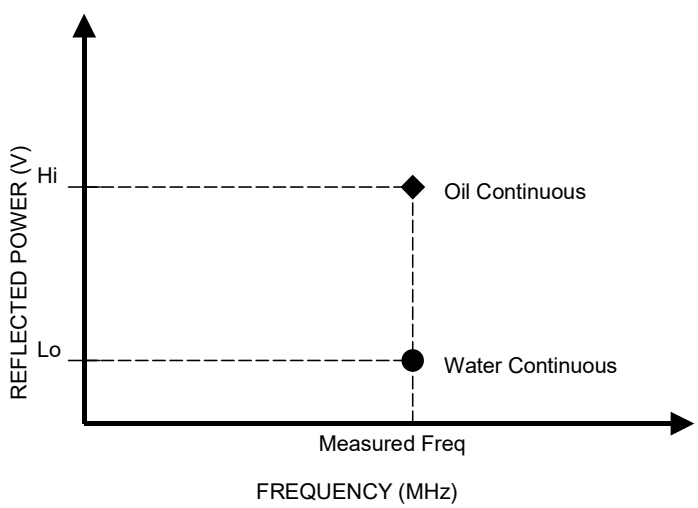

Figure 3.3 - Reflected Power Levels for Oil-Water Emulsions

During factory calibration 4 frequency boundaries are obtained:

a) Oil Lo and Oil High: They define the range where the emulsion could be Oil or Water continuous. Frequencies outside of these limits are applied to the Oil Continuous Emulsion calibration curve to calculate water cut.
b) Water Lo and Water Hi: They define the valid range of frequencies when working on the water phase. Frequencies outside these boundaries while the analyzer is working on the water phase will trigger a "Phase Error" alarm.

Figure 3.4 shows the Phase Detection Flow Chart

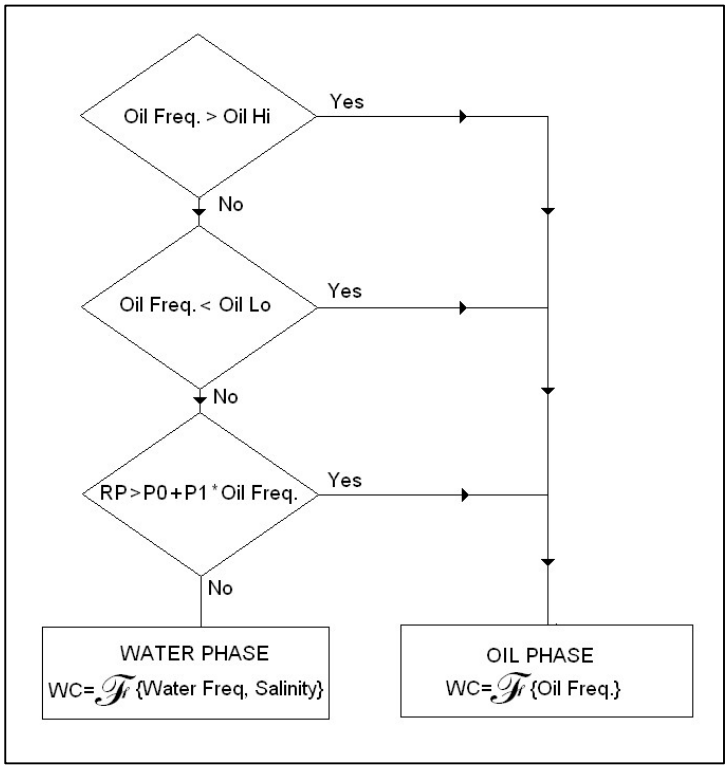

Figure 3.4

If the Oil Frequency is higher than Oil Hi, the process is in Oil Phase

If the Oil Frequency is lower than Oil Lo, the process is in Oil Phase

If the Oil Frequency is between Oil Lo and Oil Hi and the Oil Reflected Power is greater than P0 + P1 x Oil Frequency, the process is in Oil phase.

In all this three cases the calculated water cut will be a function of the Oil Freq. The processor will use the Oil Frequency and the Oil Calibration curve to calculate water cut.

If the Oil Frequency is between Oil Lo and Oil Hi *AND* the Oil Reflected Power is less than P0 + P1 x Oil Frequency, then the process is in the Water Phase. The water cut will be a function of the Water Frequency and the Salinity. The processor will use the Water Frequency and the Curve corresponding to

the Operator Entered Salinity to calculate Water Cut. If Heuristic Salinity© (Optional) is enabled the processor will use the curve corresponding to the current Heuristic Salinity and the Water Frequency to calculate water cut.

If the Phase Detection Routine detected a Water Phase and the Water Frequency is NOT between Water Lo and Water Hi, the system will trigger a Phase Error Alarm. This happens because the frequencies are out of range and the analyzer is unable to detect the proper phase. This error normally happens for 3 different reasons:

a) The salinity of the process water is outside the Salinity Calibration Limits of the unit.
b) The Water Frequency is too high due to the presence of gas.
c) The ceramic sheath that covers the center rod is broken.

3.4. Temperature Compensation

Compensation for temperature effects must be included for best performance of the analyzer. Temperature changes the permittivity of most materials; this change in permittivity presents a changing load to the oscillator, which changes its frequency. Thus, without temperature compensation, a changing process temperature would cause changes in frequency, which would lead to errors in the calculated water content. The temperature correction coefficients are obtained during calibration and also uploaded into the microprocessor. Temperature is measured by a probe located in one of the pipe saddles on a flow through, or in parallel to the measurement section on an insertion, and protrudes into the liquid stream. This temperature of the fluids is used by the microprocessor to perform the temperature correction in real time during operation.

4. Four Lines LCD Menu Description

There are 4 keys to interact with the analyzer. They are called “MENU”, “SELECT”, “VALUE” and ENTER”. To refer to these keys on this manual, they are noted as [MENU], [SELECT], [VALUE] and [ENTER].

The [MENU] key is the general key to navigate the menus and submenus. While navigating through the menus, the [MENU] key can be used to reverse the order in which the menus are shown. Just press and hold the [MENU] key until the screen shows several arrows pointing to the left and then release the key. From now on, the menus will be shown in the reverse order.

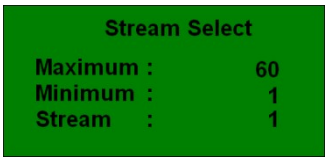

Press and hold [MENU]

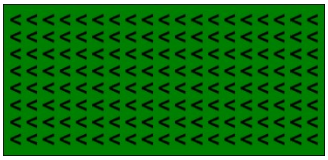

Release [MENU]. Now the Menu is browse backwards.

If needed, the original sequence can be reestablished by pressing and holding [MENU] until the arrows are shown pointing to the right. Release the [MENU] key immediately. The menus are now browsed in the original order.

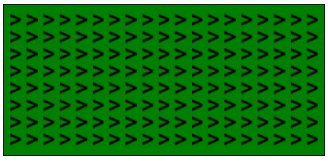

The [MENU] key can also be used to return to the main screen at any time just by pressing and holding it for about 4 seconds. The arrows mentioned above will be shown first but keep holding until the screen goes back to the main screen.

The [SELECT] key has different functions depending on when it is used. For example being on the main screen, the [SELECT] key will show more useful data without entering the menu itself. When navigating through the menus, the [SELECT] key sometimes browses a predefined list of options. It is also used to start the edition mode of configurable values. After pressing [SELECT] once and entering the edition mode, a blinking cursor will show the digit that can be changed.

The [VALUE] key, allows the user to increase on one unit every time is pressed, the digit that is highlighted by the cursor.

The [ENTER] key is used to accept changes or selections.

Beginning at the main screen, the user can browse through the menu or through the Flow Computer screens. The Flow Computer screens (Shown by pressing the [SELECT] key while in the main screen) depend on the configuration. For example if the density correction is enabled, there are extra screens showing the density related information.

The menu is organized as a flow chart. The whole list of sub-menus is browsed by pressing [MENU] repeatedly. As the analyzer has 2 different modes, Technician and Normal, the submenus that can be accessed depend on which mode the analyzer is set to. While in Normal mode, the user can access the Technician mode by using a password or by set of switches marked as S1 (Figure 4.1 and 4.2) that is located behind the display board.

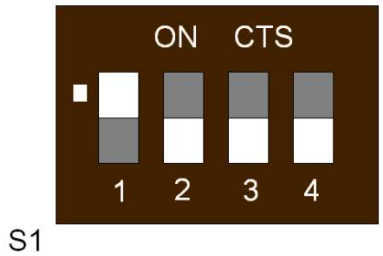

Figure 4.1

Modes:

a) Normal mode (OFF-OFF-X-X) contains basic menus for normal operation.
b) Technician mode (ON-OFF-X-X) contains all menus including installation and configuration settings.
c) Write-protect mode (X-X-ON-X) prevents all data entry until a password is entered. The default password is 1357 (For software version 6.10 and older the password is 1234). When unlocked, the unit will remain unlocked until either a power-cycle or until MENU is pressed for about 5 seconds to logout and return to the main screen.
d) Lockdown mode (XX-XX-XX-ON) prevents all data entry and menu activity. The screens that can be seen are the Main Screen and all the information screens that are available by pressing [SELECT].

There are also 2 trimmers located behind the Display Board. They are marked as R1 and R7. R1 regulates the intensity of the backlight. R7 regulates the angle of view of the text in the screen. Picture 4.2 shows the location of the two trimmers and also the group of 4 switches marked as S1.

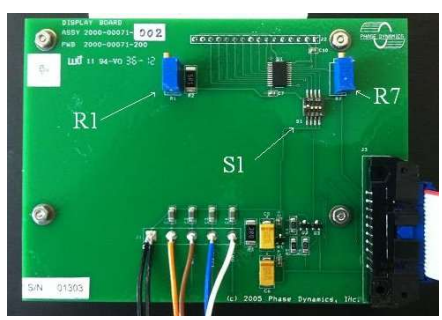

Figure 4.2

The following table describes the menu flow chart. Please note the “T”, “N” or “T/N” at the left of each submenu. The “T” means that they are only available in Technician Mode. The “N” means that those submenus are only available in the Normal mode and the “T/N” means that they are available in both.

T/N	Main Screen	[SELECT]→	Flow Computer Screens	[SELECT]→	Back to Main Screen

Press [MENU] to continue ↓

T	Change Tech Password	→ See Section 4.1 Press [MENU] to continue ↓
T	Change WP Password	→ See Section 4.2 Press [MENU] to continue ↓
T/N	Information Screen	→ See Section 4.3 Press [MENU] to continue ↓
T/N	Diagnostics	→ See Section 4.4 Press [MENU] to continue ↓
T	Time and Date	→ See Section 0 Press [MENU] to continue ↓
T	Phase Holdover	→ See Section 4.6 Press [MENU] to continue ↓
T/N	Process Averaging	→ See Section 4.7 Press [MENU] to continue ↓
T/N	Stream Select	→ See Section 4.8 Press [MENU] to continue ↓
T	Force Phase	→ See Section 4.9 Press [MENU] to continue ↓
T	Temperature Units	→ See Section 4.10 Press [MENU] to continue ↓
T/N	Temperature Adj.	→ See Section 4.11 Press [MENU] to continue ↓
T/N	Average Temperature	→ See Section 4.12 Press [MENU] to continue ↓
T/N	Capture (Oil Phase)	→ See Section 4.13 Press [MENU] to continue ↓
T/N	Cal (Oil Phase)	→ See Section 4.14 Press [MENU] to continue ↓
T/N	Capture (Water Phase)	→ See Section 4.14 Press [MENU] to continue ↓

T/N	Cal (Water Phase)	→ See Section 4.16 Press [MENU] to continue ↓
T/N	Adjust (Oil Phase)	→ Section 4.17 Press [MENU] to continue ↓
T	Adjust (Water Phase)	→ Section 4.18 Press [MENU] to continue ↓
T/N	Salinity	→ Section 4.19 Press [MENU] to continue ↓
N	FC1 Density Adjust	→ Section 4.20 Press [MENU] to continue ↓
N	Access Tech Mode	→ See Section 4.21 [Press [MENU] to continue ↓
T	Process Low (%)	→ Section 4.22 Press [MENU] to continue ↓
T	Process High (%)	→ See Section 4.23 Press [MENU] to continue ↓
T	Oil Index (MHz)	→ See Section 4.24 Press [MENU] to continue ↓
T	Water Index (MHz)	→ See Section 4.24 Press [MENU] to continue ↓
T	Oil Frequency Low	→ See Section 4.26 Press [MENU] to continue ↓
T	Oil Frequency High	→ See Section 4.27 Press [MENU] to continue ↓
T	Water Frequency Low	→ See Section 4.28 Press [MENU] to continue ↓
T	Water Frequency High	→ See Section 4.29 Press [MENU] to continue ↓
T	Oil P1 (V/MHz)	→ See Section 4.30 Press [MENU] to continue ↓
T	Oil P0 (V)	→ See Section 4.31 Press [MENU] to continue ↓
T	Configure Comm	→ See Section 4.32 Press [MENU] to continue ↓
T	Configure Relay	→ See Section 4.33 Press [MENU] to continue ↓
T	Configure AI	→ See Section 4.34 Press [MENU] to continue ↓
T	Configure AO	→ See Section 4.35 Press [MENU] to continue ↓

T	Trim RTD Lo	→ See Section 4.36 Press [MENU] to continue ↓
T	Trim RTD Hi	→ See Section 4.37 Press [MENU] to continue ↓
T	Configure Flow Computer	→ See Section 4.39 Press [MENU] to continue ↓
T/N	USB Logging	→ See Section 4.40 Press [MENU] to continue ↓
T	Restart	→ See Section 4.41 Press [MENU] to continue ↓
T	Restore Factory Defaults	→ See Section 4.42 Press [MENU] to continue ↓
	Main Menu	

Submenus Details:

4.1. Change TECH Password

This screen will display when the analyzer is unlocked. Enter here a new password for accessing technician mode from Normal Mode. Press [MENU] to skip this menu or press [SELECT] to start the edition mode. Press [SELECT] to move the cursor, then [VALUE] to change the digits and [ENTER] to accept. The default password is 1357 (For software version 6.0 and before, the password is 1234). If the password is changed by the operator a reset to Factory Defaults will also reset the password to the factory value.

4.2. Change WP Password (Write protection)

This screen will show when unlocked. To lock the screen set the Write Protection Switch to the "ON" position on the switch S1-3 located behind the display board (See the Picture 4.1 and 4.2). After the switch is on, the controller will not allow any changes unless the password is entered even when all the screens are available. The default password is 1357 (For software version 6.0 and before, the password is 1234). If the password is changed by the operator a reset to Factory Defaults will also reset the password to the factory value.

4.3. Information Screen:

Nothing can be changed on this screen. It only shows the analyzer information such as model code and serial number.

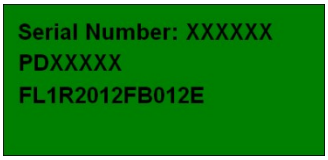

4.4. Diagnostics:

This screen shows the errors. There are two diagnostic words containing 16 bits each. That makes 32 error codes. Every single bit of these two words can be masked. To mask the errors the analyzer performs a logic AND function between the corresponding diagnostic word and its mask. If any of the mask bits is made equal to zero, that particular alarm will never be shown. By default, the masks are disabled and all the errors are displayed. This means that the bits of the masks are all ones.

The masks are shown as hexadecimal numbers which means that a mask with value "FFFF" will not filter any error. Press [MENU] to skip this menu, press [ENTER] to clear all errors, press [SELECT] to edit the masks to filter errors.

If some error is still present, it will reappear after you press the Enter key

The flags are:

Diagnostic word 1

Bit Number	Name	Hexadecimal Mask	Binary Mask
1	External Memory	FFFE	1111111111111110
2	Execution Fail	FFFD	1111111111111101
3	Timer Fail	FFFB	1111111111111011
4	Flash Memory	FFF7	1111111111110111
5	Flash Write Protection	FFEF	1111111111101111
6	Variable Boundaries	FFDF	1111111111011111
7	Variable Units	FFBF	1111111110111111
8	Internal Memory	FE7F	1111111101111111
9	Frequency Low	FEFF	1111111011111111
10	Frequency High	FDFF	1111110111111111
11	Temperature Low	FBFF	1111101111111111
12	Temperature High	F7FF	1111011111111111
13	Process Low	EFFF	1110111111111111
14	Process High	DFFF	1101111111111111
15	Reset	BFFF	1011111111111111
16	Reset Basics.	7FFF	0111111111111111

Diagnostic word 2

Bit Number	Name	Hexadecimal Mask	Binary Mask
1	Time Reset	FFFE	1111111111111110
2	Flow Computer 1 Failed	FFFD	1111111111111101
3	Flow Computer 2 Failed	FFFB	1111111111111011
4	Flow Computer 3 Failed	FFF7	1111111111110111
5	Sample Error	FFEF	1111111111101111
6	Flow Computer 1 Extrapolation	FFDF	1111111111011111
7	Flow Computer 2 Extrapolation	FFBF	1111111110111111
8	Flow Computer 3 Extrapolation	FE7F	1111111101111111
9	Flash Memory Log	FEFF	1111111011111111
10	Reserved	FDFF	1111110111111111
11	Reserved	FBFF	1111101111111111
12	Reserved	F7FF	1111011111111111
13	Reserved	EFFF	1110111111111111

14	Reserved	DFFF	1101111111111111
15	Reserved	BFFF	1011111111111111
16	Reserved	7FFF	0111111111111111

To enable two or more masks just do a logic AND between the binary codes of the respective masks. For example if the Variable Boundaries, Hi Process and Lo Process alarms need to be masked, do a logic AND between:

```
        1111111111011111
AND     1110111111111111
        1101111111111111
        1100111111011111 = CFDF
```

Convert this number to Hexadecimal (in this case CFDF) and enter it in the mask screen. The selected alarms will never be seen again.

4.5. Time and Date:

This screen shows the current Time and Date. Time is 24 hours format and Date is MM/DD/YY.

Press [MENU] to skip this menu or press [SELECT] to edit. Use [SELECT] to move the cursor and [VALUE] to change the digits. When the changes are done, press [ENTER] to accept them.

4.6. Phase Holdover:

Sometimes the process fluids change from water to oil phase and vice versa in short times. The analyzer will not change the curves that are being used for the calculation until the current phase change is not verified for at least a certain number of samples. Phase Holdover is the consecutive number of samples that the analyzer will wait until the phase is changed.

4.7. Process Averaging:

Process Averaging, is the number of samples computed to calculate the water cut by averaging. This number could be anything from 1 to 300. If 1 is used, the reading will be unfiltered. Press [MENU] to skip this menu. To edit the current number, press [SELECT] to enter the edition mode .Use [SELECT] to move the cursor and [VALUE] to change the digits. When the changes are done, press [ENTER] to accept them.

4.8. Stream Select:

The analyzer has 60 memories called Streams. They save some “Well/Stream dependent parameters”. The parameters that are stream dependents are:

Force Phase, Capture (Oil Phase), Capture (Water Phase), Adjust Oil, Adjust Water and Salinity.

Streams are very useful during operation. For example if Well number 1 needs a salinity of 1.3% and an Adjust (Oil) value of 1.9 and Well number 2 needs a salinity or 2.1% and an Adjust (Oil) of 0.7, these values can be entered in the Stream Number 1 and 2 respectively. In this way if the well number 2 is going to be tested, there is no need to enter the Salinity and the Adjust oil values. All that it is needed is to change the Stream number to number 2 on this screen and the Salinity and Adjust Oil values for that particular well will recalled.

Press [MENU] to skip this menu. To edit the current stream, press [SELECT] .Use [SELECT] to move the cursor and [VALUE] to change the digits. When the changes are done, press [ENTER] to accept them

4.9. Force Phase

The "Force phase" option allows the user to force the equations used for the calculation (water or oil) regardless of the detected Phase (See section 3.3 for more information about phase detection). There are 3 options for this parameter. Water, Oil and Auto. This setting is stream dependent which means that some of the 60 available streams (memories) can be forced while others can be left in "Automatic Phase Detection" mode (Auto). For example if a certain stream is set to Forced Water state, it will calculate the water cut using the water equations regardless of the automatic phase detection system. Before changing the setting, make sure that the desired Stream (memory) is selected (See section 4.8). Press [SELECT] or [VALUE] to change the mode. Press [ENTER] to accept the changes. Press [MENU] to skip this submenu.

4.10. Temperature Unit:

This submenu allows the user to change the main screen temperature unit. The available options are, °C, °F, °R, °K. Press [MENU] to skip this menu or use [VALUE] and/or [SELECT] to change the units and [ENTER] to accept it or [MENU] to exit without changes.

4.11. Temperature Adjust:

Enter here a value to offset the temperature value. Press [MENU] to skip this menu or press [SELECT] to start the edition mode. Use [SELECT] to move the cursor and [VALUE] to change the digits. When the changes are done, press [ENTER] to accept them or [MENU] to exit without changes.

4.12. Average Temperature:

This screen shows the temperature average. The average is kept for 24 hours starting at the time it was reset. For example if the average is reset at 10:00 AM, then the average temperature shown will be the average from 10:00AM to the present time. The average will be reset at 10:00AM the next day and so on. Press [MENU] to skip this menu or press [ENTER] to reset the temperature average.

4.13. Capture (Oil Phase)

This is a very useful command to be used when the water cut offset needs to be adjusted. At the same time that a sample is taken, activate this command to capture current data. The offset will be automatically calculated after the actual water cut is entered on the "CALIBRATE OIL PHASE" menu after the results of the sample are obtained from the laboratory. Press [MENU] to skip this menu or press [SELECT] to clear the last capture. Press [ENTER] to start a new capture. While a capture is running a "Capturing" message is shown. When the capture is finished, the time and date of the capture are shown at the bottom of the screen. For software version 6.09 and over the user has to press ENTER to start the capture and then press ENTER again to stop the capture. If Enter is not pressed within 30 seconds, the capture will be finished by the analyzer at the end of this period.

4.14. Cal (Oil Phase)

Enter the water cut corresponding to the captured sample described on the "Capture" command on the previous section. Press [MENU] to skip this menu or use [SELECT] to start the edition mode. Press

[SELECT] to move the cursor and [VALUE] to change the digits. When the changes are done, press [ENTER] to accept them or [MENU] to exit without changes.

4.15. Capture (Water Phase)

The analyzer can find the proper salinity if the actual water cut is entered. This is a very useful command to be used when the salinity needs to be adjusted to correct a water cut reading when the process is in the water phase.

At the same time that a sample is taken, activate this command to capture current data. The needed Salinity will be automatically calculated after the actual water cut is entered on the "Calibrate Water Phase" (See the next section) menu after the results of the sample are obtained from the laboratory. Press [MENU] to skip this menu or press [SELECT] to clear the last capture. Press [ENTER] to start a new capture. While a capture is running a "Capturing" message is shown. When the capture is finished, the time and date of the capture are shown at the bottom of the screen. For software version 6.09 and over the user has to press ENTER to start the capture and then press ENTER again to stop the capture. If Enter is not pressed within 30 seconds, the capture will be finished by the analyzer at the end of this period.

4.16. Cal (Water Phase)

Enter the water cut corresponding to the captured sample described on the "Capture" command (See the previous menu). Press [MENU] to skip this menu or use [SELECT] to start the edition mode. Press [SELECT] to move the cursor and [VALUE] to change the digits. When the changes are done, press [ENTER] to accept them or [MENU] to exit without changes.

4.17. Adjust (Oil Phase)

This is an offset added to the water cut. This Offset is stream dependent and it is only added to the calculation of Water Cut in the oil phase. This offset **doesn't affect** the calculation while the analyzer is in the Water Phase. This parameter is necessary to compensate for constant density changes in the oil. If different wells have different densities, the corresponding offsets (Adjust Oil) can be stored in the corresponding "Streams". Press [MENU] to skip this menu or press [SELECT] to start the edition mode. Press [SELECT] to move the cursor and [VALUE] to change the digits. When the changes are done, press [ENTER] to accept them or [MENU] to exit without changes.

4.18. Adjust (Water Phase)

This is an offset added to the water cut. This Offset is stream dependent and it is only added to the calculation of Water Cut in the water phase. This offset **doesn't affect** the calculation while the analyzer is in the Oil Phase. Don't use this parameter to adjust the Water Cut unless instructed by Phase Dynamics personnel. To adjust Water Cut in the water phase use **only** Salinity (See section 4.19). Press [MENU] to skip this menu or press [SELECT] to start the edition mode. Press [SELECT] to move the cursor and [VALUE] to change the digits. When the changes are done, press [ENTER] to accept them or [MENU] to exit without changes.

4.19. Salinity

The salinity entered by the operator indicates the equation that is going to be used by the processor to calculate Water Cut. The salinity can be entered manually or can be calculated by a process called "Capture (Water Phase) (See section 4.15). The Salinity is also a Stream Dependent parameter (See "Stream Select" in section 4.8)

4.20. FC1 Density Adjust

This is an offset to correct the differences between the densitometer signal supplied to the analyzer

with the real density. This screen shows only on Normal mode. In technician mode also shows but inside the Flow Computer subset of screens.

4.21. Access Tech Mode:

This screen is only available in Normal Mode. It allows the user to switch the analyzer to Technician Mode through a password. Up to the software release 6.10 the password was 1234. On software release 6.11 and over, the password was changed to 1357. Press [SELECT] to enter into the edition mode. Use [SELECT] and [VALUE] to change the digits and press [ENTER] to accept the changes. Press [MENU] to skip this item. To return to Normal mode press and hold [MENU] for 5 seconds.

4.22. Process Low (%):

This value sets the lower limit for water cut to activate the "Low Process" status condition on the diagnostics. Press [MENU] to skip this menu or press [SELECT] to start the edition mode. Press [SELECT] to move the cursor and [VALUE] to change the digits. When the changes are done, press [ENTER] to accept them or [MENU] to exit without changes.

4.23. Process High (%):

This value sets the upper limit for water cut to activate the "High Process" status condition on the diagnostics. Press [MENU] to skip this menu or press [SELECT] to start the edition mode. Press [SELECT] to move the cursor and [VALUE] to change the digits. After the changes are done, press [ENTER] to accept them or [MENU] to exit without changes.

4.24. Oil Index (MHz)

The Oil Index is an offset that is added to the measured frequency of the Oil Oscillator. This parameter should be used by qualified technicians only. Otherwise it should be equal to 0 MHz. Accepted values for this parameter are between -1000 to 1000 Mhz. Press [MENU] to skip this menu or press [SELECT] to start the edition mode. Press [SELECT] to move the cursor and [VALUE] to change the digits. After the changes are done, press [ENTER] to accept them or [MENU] to exit without changes.

4.25. Water Index (Mhz)

The Water Index is an offset that is added to the measured frequency of the Water Oscillator. This parameter should be used by qualified technicians only. Otherwise it should be equal to 0 MHz. Accepted values for this parameter are between -1000 to 1000 Mhz. Press [MENU] to skip this menu or press [SELECT] to start the edition mode. Press [SELECT] to move the cursor and [VALUE] to change the digits. After the changes are done, press [ENTER] to accept them or [MENU] to exit without changes.

4.26. Oil Frequency Low (MHz)

Frequencies below this limit will cause the analyzer to trigger the Phase Detection routine (See section 3.3). Press [SELECT] to enter in edition mode. Press [SELECT] and [VALUE] to modify the digits. Press [ENTER] to accept the changes or [MENU] to skip this item without modifying the value.

4.27. Oil Frequency High (MHz)

Frequencies over this limit will cause the analyzer to trigger the Phase Detection routine (See section 3.3). Press [SELECT] to enter in edition mode. Press [SELECT] and [VALUE] to modify the digits. Press [ENTER] to accept the changes or [MENU] to skip this item without modifying the value.

4.28. Water Frequency Low

Water frequencies below this limit will cause a Phase Error alarm (See section 3.3). Press [SELECT] to enter in edition mode. Press [SELECT] and [VALUE] to modify the digits. Press [ENTER] to accept the changes or [MENU] to skip this item without modifying the value.

4.29. Water Frequency High

Water frequencies aver this limit will cause a Phase Error alarm (See section 3.3). Press [SELECT] to enter in edition mode. Press [SELECT] and [VALUE] to modify the digits. Press [ENTER] to accept the changes or [MENU] to skip this item without modifying the value.

4.30. Oil P1 (V/MHz):

A threshold line determined by the equation:

X= Oil freq(MHz) x P1 + Po,

is used to detect the emulsion phase when the frequency of the Oil Oscillator is between Oil Frequency Low (See section 4.26) and Oil Frequency High (See section 4.27). The value of P1 and Po are determined during calibration and shouldn't be changed unless requested by a specialized technician from Phase Dynamics Inc. See section 3.3 for more information about the Phase Detection Routine. Press [MENU] to skip this menu or press [SELECT] to start the edition mode. Press [SELECT] to move the cursor and [VALUE] to change the digits. After the changes have been done, press [ENTER] to accept or [MENU] to exit without changes.

4.31. Oil Po (V):

See Oil P1 (Section 4.30). Press [MENU] to skip this menu or press [SELECT] to start the edition mode. Press [SELECT] to move the cursor and [VALUE] to change the digits. After the changes have been done, press [ENTER] to accept or [MENU] to exit without changes.

4.32. Configure Com ports:

This menu allows the user to configure all the communication ports. Press [MENU] to skip this menu or press [SELECT] to choose your option from:

- Modbus Com1 / PDI
- Modbus Com2 / OIT
- Modbus Com3
- Modbus Com4
- HART
- IrDA (Not yet implemented)

After reaching the desired port, press [ENTER] to go to the appropriate submenu

4.32.1. Submenu MODBUS® Com x

Note: "x" means the port number. Press the [MENU] key to navigate through the following submenus:

- Cx Slave ID

Enter here the slave address. Values from 1 to 255 are allowed. Press [MENU] to skip this menu or press [SELECT] to start the edition mode. Press [SELECT] to move the cursor and [VALUE]

to change the digits. After the changes have been done, press [ENTER] to accept or [MENU] to exit without changes.

- Cx Baud Rate

Press [MENU] to skip this menu or press [SELECT] to change to the desired baud rate. Available options are 300, 1200, 2400, 4800, 9600, 19200, 38400, 57600 and 125200. After the baud rate has been selected, press [ENTER] to accept it or [MENU] to exit without changes.

- Cx Prefix (ct)

The prefix is the time in CT (Character Time) that processor drives the network before starting a transmision. Values from 0.0 to 255.0 are allowed. The default value is 1.5. Press [MENU] to skip this menu or press [SELECT] to start the edition mode. Press [SELECT] to move the cursor and then VALUE to change digits. After the changes are done, press ENTER to accept the changes.

- Cx Suffix (ct)

The Suffix is the time in CT (Character Time) that processor drives the network after finishing a transmision. The Default value is 0. Press [MENU] to skip this menu or press [SELECT] to start the edition mode. Press [SELECT] to move the cursor and then VALUE to change digits. After the changes are done, press ENTER to accept the changes.

- Cx Reply Delay

The Reply Delay is the time the processor wait before starting a reply. Enter here the desired reply delay in milliseconds. Values from 0 to 255 are allowed. The default value is 10. Press [MENU] to skip this menu or press [SELECT] to start the edition mode. Press [SELECT] to move the cursor and then VALUE to change digits. After the changes are done, press ENTER to accept the changes or [MENU] to exit without changes.

- Cx Watchdog

The Watchdog is the time in CT (Character Time) the processor will wait before dropping an incomplete received transmision packet. Values from 1.5 to 255.0 are allowed. The default value is 50. Press [MENU] to skip this menu or press [SELECT] to start the edition mode. Press [SELECT] to move the cursor and then VALUE to change digits. After the changes are done, press ENTER to accept the changes or [MENU] to exit without changes.

- Cx Parity

Press [MENU] to skip this menu or press [SELECT] to find the desired option. Available values are:

  - NONE
  - ODD
  - EVEN
  - MARK/1
  - SPACE/0

After reaching the desired one, press [ENTER] to accept it or [MENU] to exit without changes.

- Cx Retry Time (s)

Enter here the desired retry time in seconds. Values from 0.1 to 10 are allowed. The default value is 0.4. Press [MENU] to skip this menu or press [SELECT] to start the edition mode. Press [SELECT] to move the cursor and then VALUE to change digits. After the changes are done, press ENTER to accept the changes or [MENU] to exit without changes.

- Cx Statistics

This screen shows information about the communication port. There are two screens. The first one shows the following information:

ERRORS:	(Number of errors)
WDOG:	(Number of times the Watchdog resets occurred)
INV. PKT	(Number of invalid packets)

After pressing [MENU] one more time, the second Statistics screen will show:

INV CMD:	(Number of invalid commands)
SUCCESS:	(Number of packets sent successfully)
# Retry:	(Number of retries)

Press MENU one last time to exit this submenu.

4.32.2. Submenu for HART communication port:

Press the [MENU] key to navigate through the following submenus:

- C5 Slave ID

Enter here the slave address for the HART communication. Values from 1 to 15 are allowed. Press [MENU] to skip this menu or press [SELECT] to start the edition mode. Press [SELECT] to move the cursor and then VALUE to change digits. After the changes are done, press ENTER to accept the changes.

- HART # Preambles

Press [MENU] to skip this menu or press [SELECT] to change the values. Values available are from 5 to 20. Press ENTER to accept the value selected.

- HART Version

Press [MENU] to skip this menu or press [SELECT] to choose V5 or V6. After selecting, press ENTER to accept.

- HART Port Statistics

This screen shows information about the HART port. There are two screens. The first one shows the following information:

ERRORS:	(Number of errors)
WDOG:	(Number of times the Watchdog resets occurred)
INV. PKT	(Number of invalid packets)

After pressing [MENU] one more time, the second Statistics screen will show:

ERRORS:	(Number of errors)

INV CMD: (Number of invalid commands)
SUCCESS: (Number of packets sent successfully)

Press MENU one last time to exit this submenu.

4.33. Configure Relay:

This Menu allows the user to configure both relays. The bottom line of this screen shows the relay number and his current status (Relay #1 (ON) for example). Press [MENU] to skip this menu or press [SELECT] to choose the relay to be configured (1 or 2). Then press [ENTER] to start the configuration of the chosen relay. On the following screen, the operation mode of the relay can be selected from the following options (Press [SELECT] to go through them):

- Manual
- Variable Status
- Variable = Set point
- Variable >= Set point
- Variable > Set point
- Variable < Set point
- Variable <=Set point
- Variable =! Set point
- Toggle
- Diagnostics 1
- Diagnostics 2
- Other

4.33.1. Manual Option:

Press [SELECT] to turn the selected relay ON or OFF. It is not necessary to press [ENTER] to accept it. This option is useful to test the connection with the control room.

4.33.2. Variable Status:

The relay will activate if any of the bits of the Variable status word is true. After selecting this option, the next screen will give a list of the variables that can be selected. Press [MENU] to skip this menu or browse the list using the [SELECT] key. Press [ENTER] to accept the desired variable. The next screen will show a mask that allows the user to ignore some of the status bits. The default value is FFFF. The variable status word is 16 bits long. Only 4 of them are available to the user. The rest are reserved for future upgrades. The following is the detail description of the variable status word.

Bit Number	Meaning	Hexadecimal Mask	Binary Mask
1	Reserved	FFFE	1111111111111110
2	Reserved	FFFC	1111111111111101
3	Reserved	FFFB	1111111111111011
4	Reserved	FFF7	1111111111110111
5	Hi Boundaries (Value greater than the limit)	FFEF	1111111111101111
6	Lo Boundaries (Value below the limit)	FFCF	1111111111011111
7	Hi Alarm (Value greater than alarm setting)	FFBF	1111111110111111
8	Lo Alarm (Value lower than alarm setting)	FF7F	1111111101111111
9	Reserved	FEFF	1111111011111111
10	Reserved	FCFF	1111110111111111

11	Reserved	FBFF	1111101111111111
12	Reserved	F7FF	1111011111111111
13	Reserved	EFFF	1110111111111111
14	Reserved	CFFF	1101111111111111
15	Reserved	BFFF	1011111111111111
16	Reserved	7FFF	0111111111111111

For Example if the only condition that wants to be considered to activate the relay is "Hi Boundaries" of the selected variable, then the mask for this relay should be the binary number 0000100000000000 that is the hexadecimal 0800. If no mask is used (FFFF), any of these conditions will trigger an alarm.

4.33.3. Variable Compared with Set Point

- Variable = Set point
- Variable >= Set point
- Variable > Set point
- Variable < Set point
- Variable <=Set point
- Variable =! Set point

For all these options, the relay will activate if the condition is satisfied. After browsing and accepting the desired condition by pressing [ENTER], another screen that can be navigated using the [SELECT] key, will give the option of choosing one of the available variables. After the desired variable is selected and accepted by pressing [ENTER], another screen will allow the user to set the units of the variable. This screen will show only units that are valid for the selected variable. Browse them by pressing [SELECT] and accept the desired one by pressing [ENTER]. The next screen will allow the user to set the value of the set point. Press [SELECT] to move the cursor and [VALUE] to change the digits. Then press [ENTER] to accept the changes.

4.33.4. Toggle:

Selecting this option will switch the relay ON and OFF every half a second. Once selected, just press [ENTER] to start this command.

4.33.5. Diagnostics1 and Diagnostics2:

These two menus will allow the user to set the correspondent relay to activate if any bit on the Diagnostic word assigned is set to 1. Any of the bits can be masked so they don't produce an error indication. The correspondent relay will deactivate if the error condition disappear.

After selecting the option Diagnostic1 or Diagnostic2 and pressing [ENTER], the display will show the corresponding mask. The masks are 16 bits words express in hexadecimal format. If the mask is equal to hexadecimal number FFFF, any bit on the diagnostic word will activate the relay. If some of the conditions in the diagnostic word need to be excluded as a condition to activate the relay, the correspondent bit on the mask must be set to zero.

The meaning of every bit on both diagnostics words are:

Diagnostic word 1

Bit Number	Name	Hexadecimal Mask	Binary Mask
1	External Memory	FFFE	1111111111111110
2	Execution Fail	FFFD	1111111111111101

3	Timer Fail	FFFB	1111111111111011
4	Flash Memory	FFF7	1111111111110111
5	Flash Write Protection	FFEF	1111111111101111
6	Variable Boundaries	FFDF	1111111111011111
7	Variable Units	FFBF	1111111110111111
8	Internal Memory	FE7F	1111111101111111
9	Frequency Low	FEFF	1111111011111111
10	Frequency High	FDFF	1111110111111111
11	Temperature Low	FBFF	1111101111111111
12	Temperature High	F7FF	1111011111111111
13	Process Low	EFFF	1110111111111111
14	Process High	DFFF	1101111111111111
15	Reset	BFFF	1011111111111111
16	Reset Basics.	7FFF	0111111111111111

Diagnostic word 2

Bit Number	Name	Hexadecimal Mask	Binary Mask
1	Time Reset	FFFE	1111111111111110
2	Flow Computer 1 Failed	FFFD	1111111111111101
3	Flow Computer 2 Failed	FFFB	1111111111111011
4	Flow Computer 3 Failed	FFF7	1111111111110111
5	Sample Error	FFEF	1111111111101111
6	Flow Computer 1 Extrapolation	FFDF	1111111111011111
7	Flow Computer 2 Extrapolation	FFBF	1111111110111111
8	Flow Computer 3 Extrapolation	FE7F	1111111101111111
9	Flash Memory Log	FEFF	1111111011111111
10	Reserved	FDFF	1111110111111111
11	Reserved	FBFF	1111101111111111
12	Reserved	F7FF	1111011111111111
13	Reserved	EFFF	1110111111111111
14	Reserved	DFFF	1101111111111111
15	Reserved	BFFF	1011111111111111
16	Reserved	7FFF	0111111111111111

To enable two or more masks just do a logic AND between the binary codes of the respective masks. For example if the Variable Boundaries, Hi Process and Lo Process alarms need to be masked, do a logic AND between:

```
        1111111111011111
AND     1110111111111111
        1101111111111111
        1100111111011111 = CFDF
```

Convert this number to Hexadecimal (in this case CFDF) and enter it in the mask screen. The selected alarms will never be seen again.

4.33.6. Other:

This option is reserved to be used when the relay has to be activated by other special conditions in the software (Like external coil writing via MODBUS®)

4.34. Configure AI (Analog Inputs):

This menu allows the user to configure the analog input/s. If the system is an "Enhanced" model, only one analog input is available. If the system is an "Expanded" model, then five analog inputs are available. Press [MENU] to skip this menu or press [SELECT] to choose the analog input to be configured (Expanded models), then press [ENTER] to start configuring the selected Analog Input.

Note: "x" means the Analog Input number.

4.34.1. AI #x Variable:

Press [MENU] to skip this submenu or press [SELECT] to browse the variables list to choose the variable to be assigned to this Analog Input. Then press [ENTER] to accept it.

4.34.2. AI #x Unit:

Press [MENU] to skip this submenu or press [SELECT] to browse the units list. Press [ENTER] to accept it. The units list shown depends on the variable selected.

4.34.3. AI #x LRV:

This screen will show the current Analog Input "Lower Range Value" LRV. This value is the value that will be assigned to a current input of 4mA. Press [MENU] to skip this submenu or [SELECT] to enter the edition mode. If the value needs to be changed, press [SELECT] to move the cursor and [VALUE] to change the digits. When finished, press [ENTER] to accept it.

4.34.4. AI #x URV:

This screen will show the current Analog Input "Upper Range Value" URV. This is the value that will be assigned to a current input of 20 mA. Press [MENU] to skip this submenu or [SELECT] to enter the edition mode. If the value needs to be changed, press [SELECT] to move the cursor and [VALUE] to change the digits. When finished, press [ENTER] to accept it.

4.34.5. AI #x Trim 4 mA:

This screen allows the user to trim the lower end of the Analog Input. If the lower end of the analog input is trimmed, the high limit should also be trimmed (See section 4.34.6). Press [MENU] to skip the submenu. If the Analog Input needs to be trimmed, connect a current source at the Analog Input being trimmed and set the current source to 4mA. Then press [ENTER] to accept the new trimming value.

To reset factory defaults settings for the 4 mA trimming, press [SELECT]

4.34.6. AI #x Trim 20 mA:

This screen allows the user to trim the upper end of the Analog Input. Trim the Analog Input lower limit first (See section 4.34.5). Press [MENU] to skip this submenu. If the Analog Input needs to be trimmed, connect a current source at the Analog Input being trimmed and set the current source to 20mA. Then press [ENTER] to accept the new trimming value.

To reset factory defaults settings for the 20 mA trimming, press [SELECT]

4.34.7. AI #x Dampening (s):

This screen allows the user to set the dampening time for the selected Analog Input in seconds. Press [MENU] to skip this submenu. Press [SELECT] to enter the edition mode. Use [SELECT] to move the cursor and [VALUE] to change the digits. Then press [ENTER] to accept the new value.

4.34.8. Analog Input #x:

This last screen shows the actual value of the Analog Input selected. Nothing can be changed on this screen.

Analog Input # 1
11.94 mA / 49.63 %
FC1 Total Flow
1496.32 m3/hr

4.35. Configure AO (Analog Outputs):

This menu allows the user to configure the analog output/s. If the system is an "Enhanced" model, only one analog output is available. If the system is an "Expanded" model, then five analog outputs are available. Press [MENU] to skip this menu or press [SELECT] to choose the analog output to be configured (Only one is available for "Expanded" models). Then press [ENTER] to start configuring the selected Analog Input.

Note: "x" means the Analog Output number.

4.35.1. AO #x Variable:

At this point the menu will show the variable list. Press [MENU] to skip this menu or press [SELECT] to browse the list of variables. Then press [ENTER] to accept.

4.35.2. AO #x Unit:

This screen will show the Units list. Browse the list using the [SELECT] key or press [MENU] to leave the current one. If a new unit is selected, press [ENTER] to accept it. The list of units depends on the variable.

4.35.3. AO #x LRV:

This screen will show the current Analog Output "Lower Range Value" or "LRV". This value is the low limit assigned to the 4 mA current. Press [MENU] to accept the current value or [SELECT] to change it. If the value has to be changed, press [SELECT] to move the cursor and [VALUE] to change the digits. When finished, press [ENTER] to accept the changes.

4.35.4. AO #x URV:

This screen will show the current Analog Output "Upper Range Value" or "URV". This value is the upper limit assigned to the 20mA current. Press [MENU] to accept the current value or [SELECT] to enter the edition mode. If the value needs to be changed, press [SELECT] to move the cursor and [VALUE] to change the digits. When finished, press [ENTER] to accept the changes.

4.35.5. AO #x Trim 4 mA:

This screen allows the user to trim the lower end of the Analog Output. If the lower end needs to be trimmed, please also trim the upper end (Section 4.35.6).

Press [MENU] to skip this submenu. Press [SELECT] to reset factory defaults for 4 mA trimming.

If the Analog Output needs to be trimmed, connect a current meter at the Analog Output being trimmed. Then press [ENTER] to trim. The next screen will allow the user to enter the real current value indicated by the current meter. Use the [SELECT] key to move the cursor. Press [VALUE] to change the digits and press [ENTER] when finished to accept the new value. The trimming of the 4mA is finished.

4.35.6. AO #x Trim 20 mA:

This screen allows the user to trim the upper end of the Analog Output. If the upper end needs to be trimmed, please also trim the lower end (Section 4.35.5).

Press [MENU] to skip this menu. Press [SELECT] to reset the factory default for the 20mA trimming.

If the Analog Output needs to be trimmed, connect a current meter at the Analog Output being trimmed. Then press [ENTER] to trim. The next screen will allow the user to enter the real current value indicated by the current meter. Use the [SELECT] key to move the cursor. Press [VALUE] to change the digits and press [ENTER] when finished to accept the new value. The trimming of the 20mA is finished.

4.35.7. AO #x Alarm Select:

This submenu allows the selection of the value of the Analog Output on an alarm conditions. Two options are available.

High (20mA)

Low (4mA)

Use the [MENU] key to skip this submenu or use [SELECT] to choose the desired option. Then press [ENTER] to accept it.

4.35.8. AO #x Mode:

Three options are available:

Automatic: The analog output is controlled by the assigned variable.

Manual: The analog output is controlled manually from the menu. This option is useful to simulated the Analog Output/s during start up

Automatic/Reverse: The analog input is controlled by the assigned variable but reversed. The lower value of the variable will produce 20mA and the upper value of the variable will produce 4mA.

Use the [MENU] key to skip this submenu or use [SELECT] to choose the desired option. Then press [ENTER] to accept it.

If the Manual option is selected, another extra screen will allow the user to manually change the value of the Analog Output being configured. Use [SELECT] to move the cursor, [VALUE] to change the digits and [ENTER] to accept it.

4.35.9. AO #x Dampening (s):

This screen allows the user to set the dampening time in seconds. Press [MENU] to skip this submenu or press [SELECT] to enter the edition mode. Use [SELECT] to move the cursor and [VALUE] to change the digits. Then press [ENTER] to accept the new value.

4.36. Trim RTD Lo (Software Version 6.09 and over)

The screen will instruct the operator to connect a 100 Ohms resistor. The resistor has to be connected between the terminals P1 and P2. Also a short circuit has to be done between P+ and P1 and another between P2 and P3 (See figure 4.3). Press [MENU] to skip or [ENTER] to trim (after the resistor has been connected). If [ENTER] is pressed, the system will ask the operator to press [SELECT] if he wants to proceed or [MENU] to abort and skip this menu.

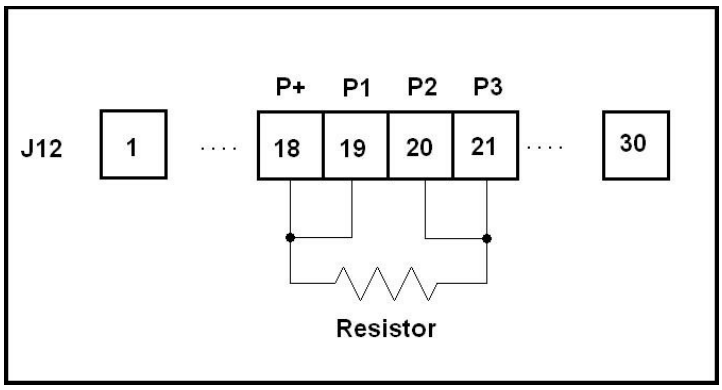

Figure 4.3

4.37. Trim RTD Hi (Software Version 6.09 and Over)

The screen will instruct the operator to connect a 125 Ohms resistor. The resistor has to be connected between the terminals P1 and P2. Also a short circuit has to be done between P+ and P1 and another between P2 and P3 (See figure 4.3). Press [MENU] to skip or [ENTER] to trim (after the resistor has been connected). If [ENTER] is pressed, the system will ask the operator to press [SELECT] if he wants to proceed or [MENU] to abort and skip this menu

4.38. Density Correction:

This screen allows the user to configure the density correction options. . Press [MENU] to skip this menu or press [SELECT] to browse the options. There are 7 different options. They are:

OPTIONS	*MEANING*
Disabled	Density correction not enable
Coriolis, PDI Temp	Micro Motion® Coriolis Flow Meter via RS485, Phase Dynamics temperature
Coriolis, ALT Temp	Micro Motion® Coriolis Flow Meter via RS485, Temperature via Analog Input 1
Coriolis_API60F, COR Temp	Micro Motion® Coriolis Flow Meter via RS485 for density and temperature.
Coriolis_API60F, PDI Temp	Micro Motion® Coriolis Flow Meter via RS485, Phase Dynamics temperature
Coriolis_API60F, ALT Temp	Micro Motion® Coriolis Flow Meter via RS485, Temperature via Analog Input.
Other	Density via analog input. Phase Dynamics temperature

After selecting the desired one, press [ENTER] to accept.

4.38.1. Coriolis Options:

If any of the Coriolis options is selected, the analyzer will use the selected communication port as a MODBUS® master to poll ONLY Micro Motion® Coriolis Meters. For all the Coriolis options the following screens will be shown:

- Coriolis Port:

The default option is Com3 (Communication port number 3). This is the recommended port to be used for density compensation. The settings of the port for density correction are: 9600 8 N 1. Configure your Micro Motion® Coriolis Mass Flow Meter accordingly.

- Cor1 Dampen Density (s):

This screen allows the user to set the dampening constant for density in seconds. The default value is zero. Press [MENU] to skip this submenu or press [SELECT] to enter the edition mode. Press [SELECT] to move the cursor, [VALUE] to change the digits and [ENTER] to accept the changes.

- Cor1 Dampen Flow (s):

This screen allows the user to set the dampening constant for flow in seconds. The default value is zero. Press [MENU] to skip this submenu or press [SELECT] to enter the edition mode. Press [SELECT] to move the cursor, [VALUE] to change the digits and [ENTER] to accept the changes.

- Cor1 VFR Cutoff:

This screen allows the user to set the volumetric flow rate cut off. The default value is zero. Press [MENU] to skip this submenu or press [SELECT] to enter the edition mode. Press [SELECT] to move the cursor, [VALUE] to change the digits and [ENTER] to accept the changes.

- Coriolis Zero:

This menu allows the user to zero the Mass Flow Meter. Press [MENU] to skip this menu. Press Enter to zero the meter. The time needed to zero the meter depends on the Mass Flow Meter settings. Normally is about 40 seconds.

- Other:

This option will use the FC1 (Flow Computer 1) density as the input for the density correction.

The following screens are available for either the "Coriolis" options or the "Other" option. The equation used for the density correction is:

Corrected Water cut = WC + Adjust (Oil Phase) + Density correction

*Density Correction = (Density – Calibration Density + FC1 Density adjust) * D1 + D0*

Where:

- WC is the uncorrected water cut
- Adjust (Oil Phase) is the calibration offset for the oil phase (See Adjust (Oil Phase) menu)
- Density is the density corrected to 60°F or to 15°C depending on the unit. If the density provided is not corrected (process conditions) the analyzer corrects it internally.
- Calibration density is a value dependent of the unit selected (see below)
- FC1 Density adjust is an offset that can be used to match the density reading with the densitometer is they have a small difference.
- D1 is the Slope (See below)
- D0 is the offset (See below)

Density correction for API at 60°F = (Density – 32) *0.16 + 0
Density correction for Kg/m3 at 15°C = (Density – 0) *(-0.0286) + 24.6 (This equation is only valid for a density range of 750 kg/m3 to 998 kg/m3)

4.38.2. Density Correction Unit:

This menu allows the user to select one of the two options for the density correction units. API at 60°F or Kg/m3 at 15°C. Use [SELECT] to choose one of them and then [ENTER] to accept it or use [MENU] to skip this menu.

4.38.3. Calibration Density:

The default value depends on the units selected on the previous menu. For API at 60°F, the default value is 32. For Kg/m3 at °15C, the default value is 0.00. Press [MENU] to skip this menu. Press [SELECT] to enter the edition mode. Then press [SELECT] to move the cursor and [VALUE] to change the digits. When done, press [ENTER] to accept the changes.

4.38.4. Density Coeff. D3:

The default value is zero for both API @ 60°F or KG/m3 at 15°C. Press [MENU] to skip this menu. Press [SELECT] to enter the edition mode. Then press [SELECT] to move the cursor and [VALUE] to change the digits. When done, press [ENTER] to accept the changes.

4.38.5. Density Coeff. D2:

The default value is zero for both API @ 60°F or KG/m3 at 15°C. Press [MENU] to skip this menu. Press [SELECT] to enter the edition mode. Then press [SELECT] to move the cursor and [VALUE] to change the digits. When done, press [ENTER] to accept the changes.

4.38.6. Density Slope D1:

The default value depends on the units selected on the previous menu. For API at 60°F, the default value is 0.16. For Kg/m3 at °15C, the default value is -0.00286. Press [MENU] to skip this menu. Press [SELECT] to enter the edition mode. Then press [SELECT] to move the cursor and [VALUE] to change the digits. When done, press [ENTER] to accept the changes.

4.38.7. Density Adj Offset D0:

The default value depends on the units selected on the previous menu. For API at 60°F, the default value is 0.00. For Kg/m3 at °15C, the default value is 24.6. Press [MENU] to skip this menu. Press [SELECT] to enter the edition mode. Then press [SELECT] to move the cursor and [VALUE] to change the digits. When done, press [ENTER] to accept the changes

4.38.8. FC1 Density Adjust:

The default value is 0.00 for both units. Press [MENU] to skip this menu. Press [SELECT] to enter the edition mode. Then press [SELECT] to move the cursor and [VALUE] to change the digits. When done, press [ENTER] to accept the changes.

4.39. Configure Flow Computer

The Flow Computer can calculate Net Flow Rates, Net Totals, Gross Flow Rates and Gross Totals.

The Gross totals and flow rates are at process conditions. The Flow Rate input (if supplied) is affected by the actual water cut to calculate the Oil flow rate, Water flow rate, Oil total and water total.

The Net values are corrected to standard conditions. The total flow rate is affected by the actual water cut. Then the oil volume is corrected to standard condition using manually entered densities. The Shrink factor and Meter Factors are also used in this correction. The Shrink Factor takes care of the flashed light hydrocarbons that will not be present on "Tank storage conditions". This factor can be ignored by keeping it equal to 1.0000. The Meter Factor is a correction factor used to correct any discrepancies between the supplied and the real flow rate and the real. This Meter Factor can be ignored by keeping it equal to 1.0000

The calculation of the Net Oil Production is:

Net Oil Production = Indicated Volume x MF x Shrink x WC x TCF

Where:

- Indicated Volume: Volume integrated by the Flow Computer
- MF: Meter Factor
- SHRINK: Is the factor that corrects the volume reduction produced by evaporation of the light hydrocarbons when the production is stored in tanks.
- TCF: Temperature Correction Factor calculated using the manually entered densities.

While on the "Configure Flow Computer" screen, press [MENU] to skip this menu or press [ENTER] to start the configuration of the Flow Computer.

For more information about the Flow Computer, please see section 7

4.39.1. FC1 Enable:

There are two options: ON and OFF. Press [MENU] to skip this submenu. Press [SELECT] to change. After changing, press [ENTER] to accept it.

4.39.2. FC1 Gross Enable:

This submenu enables the calculation of Gross Flow Rate and Gross Totals (readings at process conditions). There are two options: ON and OFF. Press [MENU] to skip this submenu. Press [SELECT] to change. After changing, press [ENTER] to accept it.

4.39.3. FC1 Pulse Enable:

This enables the "Pulse Input". There are two options: ON and OFF. Press [MENU] to skip this submenu. Press [SELECT] to change. After changing, press [ENTER] to accept it. If this option is enabled, there will be another screen to configure the pulse input.

4.39.4. FC1 Density Enable:

There are two options: ON and OFF. Press [MENU] to skip this submenu. Press [SELECT] to change. After changing, press [ENTER] to accept it.

4.39.5. FC1 Net Enable:

This submenu enables the "Net Calculations" (Values corrected to standard conditions). There are two options: ON and OFF. Press [MENU] to skip this submenu. Press [SELECT] to change. After changing, press [ENTER] to accept it.

4.39.6. FC1 Flow Class:

There are two options here: "Volumetric Flow" or "Mass Flow". Press [MENU] to skip this submenu. Press [SELECT] to change. After changing, press [ENTER] to accept it.

4.39.7. FC1 Flow Unit:

This submenu allows the user to select the Flow Rate units. The units depend on the class selected on the previous submenu. ". Press [MENU] to skip this submenu. Press [SELECT] to browse the units. When selected, press [ENTER] to accept it.

4.39.8. FC1 Accumulator Unit:

This Submenu allows the user to select the units for the totalizers. The unit list depends on the Flow Class selected above. Press [MENU] to skip this submenu. Press [SELECT] to browse the units. When selected, press [ENTER] to accept it.

4.39.9. FC1 #Pulses/volumetric or mass total unit:

This submenu only appears if the submenu FC1 Pulse Enable was set to ON. This submenu allows the user to enter the number of pulses per volumetric or mass total units.

4.39.10. FC1 Temperature Unit:

This submenu allows the user to select the temperature units. Press [MENU] to skip this submenu. Press [SELECT] to browse the units. When selected, press [ENTER] to accept it. Possible units are °C, °F, °K and °R

4.39.11. FC1 Density Units:

This submenu allows the user to select the density units. Press [MENU] to skip this submenu. Press [SELECT] to browse the units. When selected, press [ENTER] to accept it.

4.39.12. FC1 Pressure Units:

This submenu allows the user to select the pressure units. Press [MENU] to skip this submenu. Press [SELECT] to browse the units. When selected, press [ENTER] to accept it.

4.39.13. FC1 Manual Density:

If a density signal is not available, the density can be entered manually. There are two options: NO and YES. Press [MENU] to skip this submenu. Press [SELECT] to change. After changing, press [ENTER] to accept it.

4.39.14. FC1 Manual Pressure:

If a pressure signal is not available, it can be entered manually. There are two options: NO and YES. Press [MENU] to skip this submenu. Press [SELECT] to change. After changing, press [ENTER] to accept it.

4.39.15. FC1 Manual Flow:

If a flow signal is not available the flow can be entered manually. There are two options: NO and YES. Press [MENU] to skip this submenu. Press [SELECT] to change it. After changing, press [ENTER] to accept it.

4.39.16. FC1 Use PDI WC:

A manual Water Cut value could be used instead of the Phase Dynamics reading. There are two options: YES and NO. Press [MENU] to skip this submenu. Press [SELECT] to change. After changing, press [ENTER] to accept it.

4.39.17. FC1 Use PDI Temperature:

A different temperature reading could be used instead of the Phase Dynamics reading. For example a temperature signal could be supplied through an analog input. There are two options: YES and NO. Press [MENU] to skip this submenu. Press [SELECT] to change. After changing, press [ENTER] to accept it.

4.39.18. FC1 Use PDI Salinity:

A different salinity reading could be used instead of the Phase Dynamics value. For example a salinity signal could be supplied through an analog input. There are two options: YES and NO. Press [MENU] to skip this submenu. Press [SELECT] to change. After changing, press [ENTER] to accept it.

4.39.19. FC1 API Table:

This submenu allows the user to select the API table used to perform the corrections. There are four options:

A: General Crude
B: General Products
C: Special
D: General Lubricants

Press [MENU] to skip this submenu. Press [SELECT] to change. After changing, press [ENTER] to accept it. (For more information about the API correction tables, consult the "Manual of Petroleum Measurement Standards" Chapter 20 – Allocation Measurement. API)

4.39.20. M.F.:

This Submenu allows the user to change the Meter Factor (M.F.). The default value is 1.0000. Press [MENU] to skip this menu. Press [SELECT] to start the edition mode. Press [SELECT] to move the cursor. Press [VALUE] to change the value of the digits. Press [ENTER] to accept the new values when finished. (For more information about the Meter Factor, consult the "Manual of Petroleum Measurement Standards" Chapter 11.1 – Volume Correction Factors. API)

4.39.21. SHRINK:

This Submenu allows the user to change the SHRINK factor. The default value is 1.0000. Press [MENU] to skip this menu. Press [SELECT] to start the edition mode. Press [SELECT] to move the cursor. Press [VALUE] to change the value of the digits. Press [ENTER] to accept the new values when finished. (For more information about the SHRINK factor, consult the "Manual of Petroleum Measurement Standards" Chapter 20 – Allocation Measurement. API)

4.39.22. FC1 Oil Dens@ST (API):

This submenu allows the user to enter the oil density at standard conditions in API. Press [MENU] to skip this menu. Press [SELECT] to start the edition mode. Press [SELECT] to move the cursor. Press [VALUE] to change the value of the digits. Press [ENTER] to accept the new value when finished.

4.39.23. FC1 Water Dens@ST (Kg/m3):

This submenu allows the user to enter the water density at standard conditions in Kg/m3. Press [MENU] to skip this menu. Press [SELECT] to start the edition mode. Press [SELECT] to move the cursor. Press [VALUE] to change the value of the digits. Press [ENTER] to accept the new value when finished.

4.39.24. FC1 Oil Dens@PT (API):

This submenu allows the user to enter the Oil density at process conditions in API. Press [MENU] to skip this menu. Press [SELECT] to start the edition mode. Press [SELECT] to move the cursor. Press [VALUE] to change the value of the digits. Press [ENTER] to accept the new value when finished.

4.39.25. FC1 Water Dens@PT (Kg/m3):

This submenu allows the user to enter the Water density at process conditions in Kg/m3. Press [MENU] to skip this menu. Press [SELECT] to start the edition mode. Press [SELECT] to move the cursor. Press [VALUE] to change the value of the digits. Press [ENTER] to accept the new value when finished.

4.39.26. FC1 Density Adjust:

This submenu allows the user to enter an offset for the density in case the display value doesn't match the densitometer to compensate for analog inputs / outputs errors. Press [MENU] to skip this menu. Press [SELECT] to start the edition mode. Press [SELECT] to move the cursor. Press [VALUE] to change the value of the digits. Press [ENTER] to accept the new value when finished.

4.40. USB Logging (Optional)

This Menu allows the user to enable the data logging feature. This electronic has a USB port that can be used for data logging. The connector is on the Mother Board and it is identified as J13.

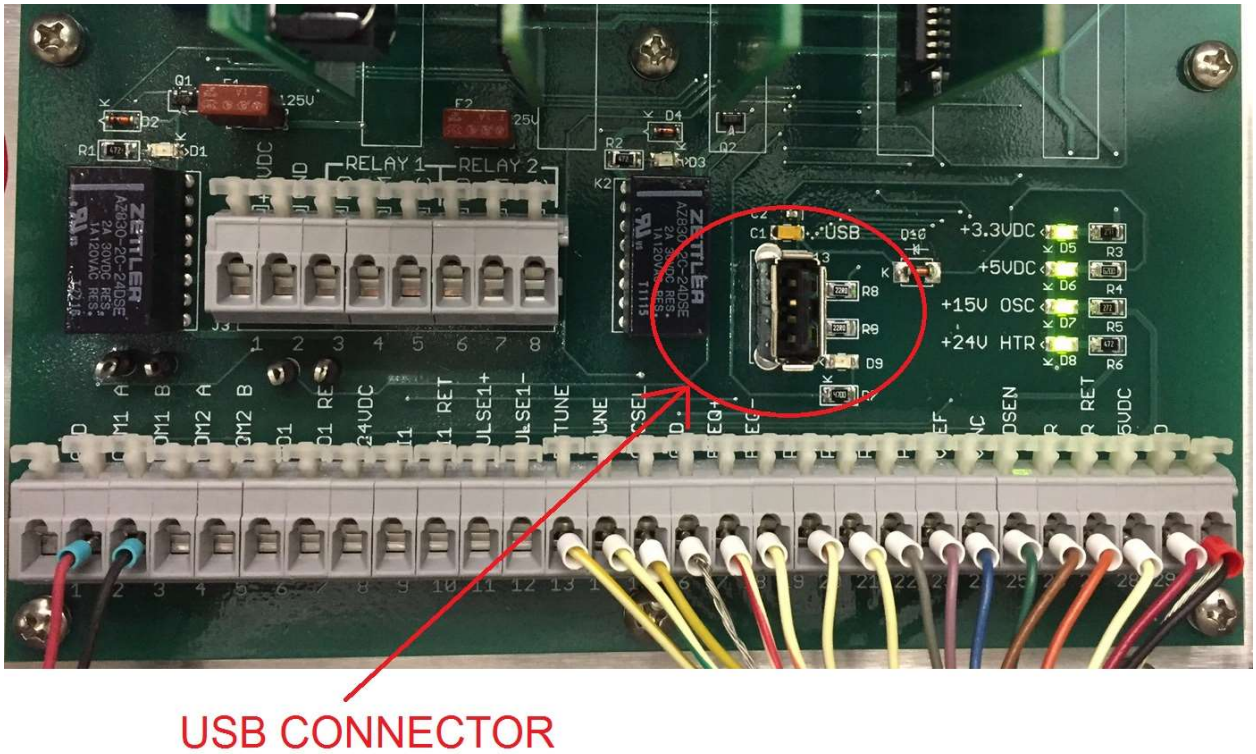

Before inserting a flash memory, make sure this screen shows the message "USB Logging: OFF". Insert the memory on J13 and then Press [SELECT] to change the status to "ON". After that the screen will show two messages: "MEDIA DETECTED: NO/YES", and "MEDIA MOUNTED: NO/YES". After the media is ready to start logging both messages will show "YES".

To stop the data logging, press [SELECT] or [VALUE] to select “NO” and press [ENTER]. Then you will need to press [ENTER] again to confirm. DO NOT remove the media without stopping the data logger first or the file can be damaged.

ATTENTION:

DO NOT remove the media without stopping the data logger first or the file can be damaged

After turning data logging on and pressing [MENU] the next screen will allow the user to change the data logging period. Press [SELECT] to start the edition mode. Press [SELECT] to move the cursor. Press [VALUE] to change the value of the digits. Press [ENTER] to accept the new value when finished.

When the data logger is enabled, a new comma separated values file is created every day at midnight. The name of the file is:
LOG_Month-Day-Year.CSV
For example: LOG_05-16-2017.CSV

The first row on the file is the list of variables. The data is not scaled.

4.41. Restart:

This menu restarts the CPU. Press [MENU] to skip this menu. Press [ENTER] to restart.

4.42. Restore Factory Defaults:

This menu allows the user to restore to factory default configuration. Press [SELECT] to select YES and the Enter to proceed.

5. Touch Screen Menu Description

The touch screen can be used in 2 ways. Touching the screen itself when the screen is exposed or through the four push buttons [MENU], [SELECT], [VALUE] and [ENTER] when install inside an explosion proof box. The screens that are available are the same when navigating by touch or by the push buttons. 99% of the analyzers installed around the world are in an explosion proof enclosure and they are mainly operated by push buttons.

5.1. General operation of the screens

The screens are very easy to navigate just by touching the screen (When the screen is mounted on a non dangerous area or a hot permit has been obtained to remove the glass cover of the explosion proof enclosure). Also the operator can navigate and operate the analyzer by using the four push buttons [MENU], [SELECT], [VALUE] and [ENTER].

There are 3 general operations:

5.1.1. Editing Values on a text box

In the next screen the value of Oil Adj. has to be changed. Touch the Text Box or press [SELECT] twice until the pointer points the Oil Adj. text box and then press [ENTER]

After pressing [ENTER] the following screen will be displayed:

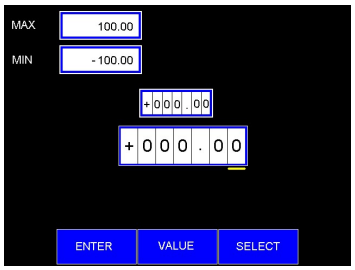

Once on this screen, press [SELECT] to move the cursor, press [VALUE] to increase the value of the selected digit. Press [ENTER] when done to accept the change or press [MENU] to exit without changes.

If instead of using the push buttons, the screen is accessible, touch the text box that needs to be edited. A key pad will show over the base screen. Just key the number in and press the Enter key on the key pad

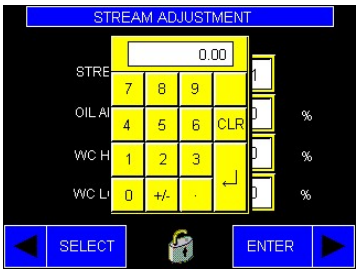

5.1.2. Using Buttons

If the touch-screen is accessible, just touch the button to activate it. If not, press [SELECT] until the blue index point to the button that needs to be activated and then press [ENTER]

For example to enter in the Stream Configuration Screen, the Green "STREAM" button has to be pressed.

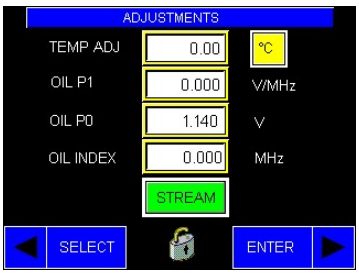

If the touch-screen is accessible, just touch it. If not, press [SELECT] repeatedly until the blue index points to the "STREAM" Button.

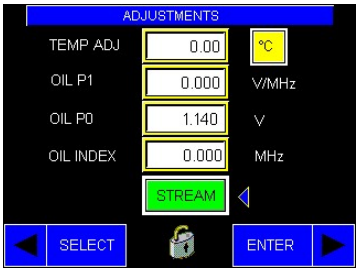

Press [ENTER] to access the Stream Configuration Screen

5.2. Operating List Boxes

List Boxes show different preselected values for some variables. The operation of all the list boxes is identical. For example to select the variable for the Analog Input 1 the analyzer will display a screen like this one:

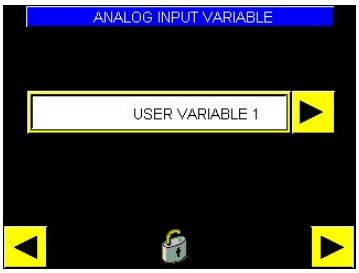

To change this variable for another available in the list, Touch the list box (if the touch-screen is accessible) or press [SELECT] repeatedly until the blue index points to the list box and then press [ENTER] to display the options.

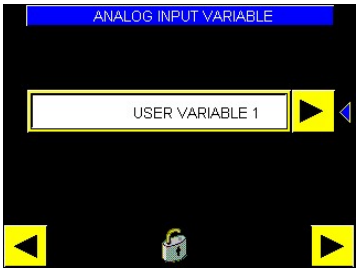

For this example the list will be like this:

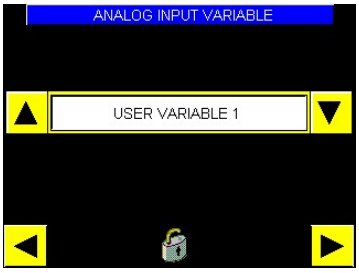

Pressing [VALUE] or touching the arrow pointing up will browse the list is ascending order. Pressing [SELECT] or touching the arrow pointing down will browse the list in reverse order. The list shown depends on the List Box being operated.

5.2.1. Toggling check mark statuses

All the check marks operate in the same way. Touch them to toggle the status of the check mark if the touch-screen is accessible or press [SELECT] repeatedly until the blue index point at it and then press [ENTER] to toggle the status. Examples of Check Marks are the Enable Flow Computer, Enable Gross and the Enable Net check marks.

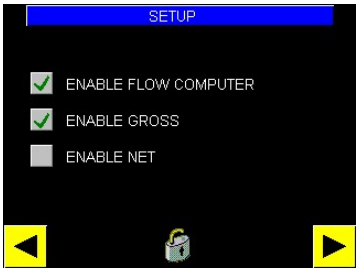

5.2.2. Saving Configurations

Every time a parameter is changed by the operator or by MODBUS®, a little floppy disk icon will show up in some of the screens. That is a reminder that there are configurations that need to be saved. If the analyzer loses power, all this non saved configurations will be lost. After the configurations is saved, the little floppy icon will disappear (this normally takes a couple of seconds)

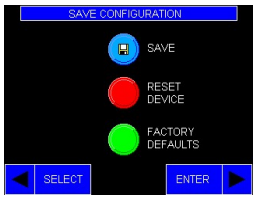

To save the configurations just touch the button with the floppy or follow the next list of operations if using push buttons:

Start at this screen					
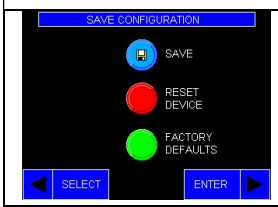	Press [SELECT]	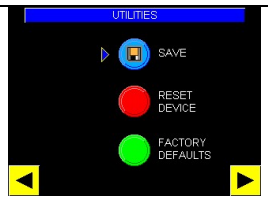	Press [ENTER]	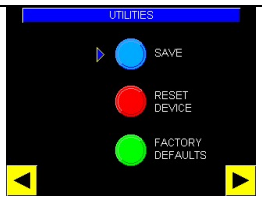	Press [MENU] to go back

5.3. *Screen types*

There are two sets of screens. One set is to configure and operate the analyzer itself and it is accessed by pressing [MENU] or by touching the lower right arrow. The second set of screens is used to configure peripherals and other important features such as Density Correction, Data logging, Flow computer, etc and it is accessed by pressing [SELECT] or by touching the blue Menu button.

The following diagram shows how to access one set or the other:

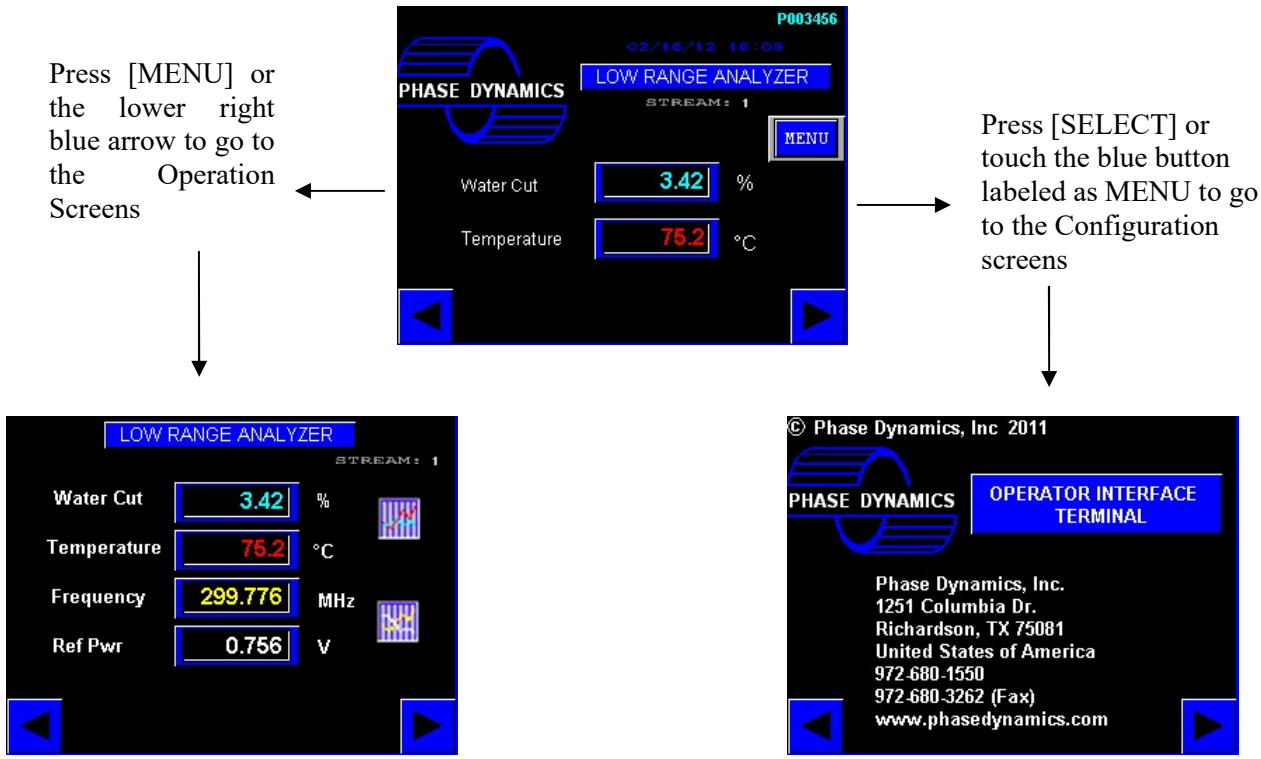

5.4. *Operation Screens*

Start on this Screen	
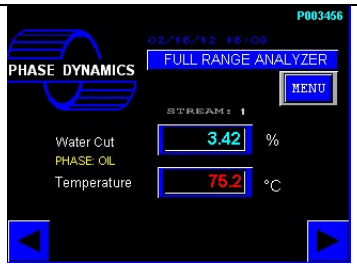	See section 5.4.1 Press MENU or Touch the Blue Arrow at the bottom Right corner to continue ↓

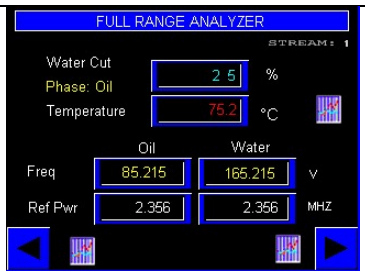	See section 5.4.2 Press MENU or Touch the Blue Arrow at the bottom Right corner to continue. ↓
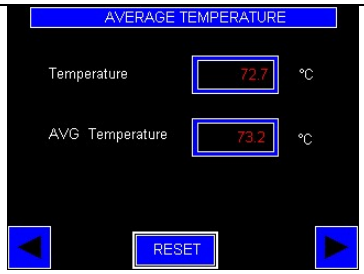	See section 5.4.3 Press MENU or Touch the Blue Arrow at the bottom Right corner to continue ↓
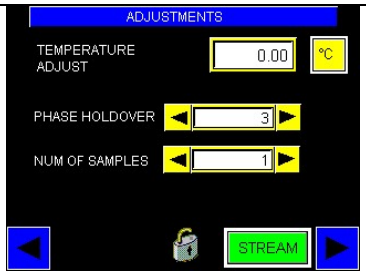	See section 5.4.4 Press MENU or Touch the Blue Arrow at the bottom Right corner to continue ↓
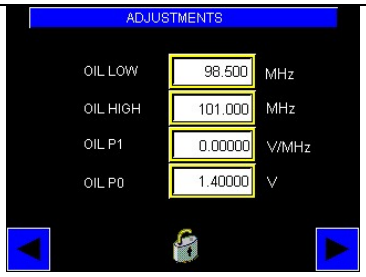	See section 5.4.5 Press MENU or Touch the Blue Arrow at the bottom Right corner to continue ↓
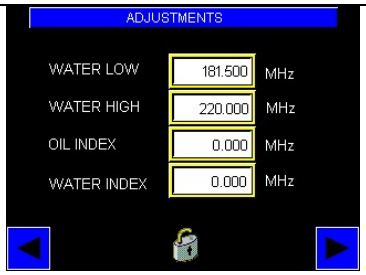	See section 5.4.6 Press MENU or Touch the Blue Arrow at the bottom Right corner to continue ↓

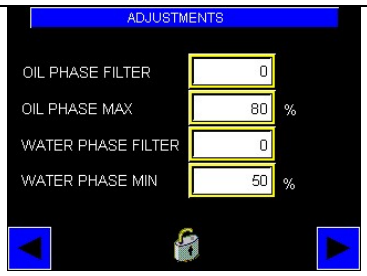	See section 5.4.7 Press MENU or Touch the Blue Arrow at the bottom Right corner to continue ↓
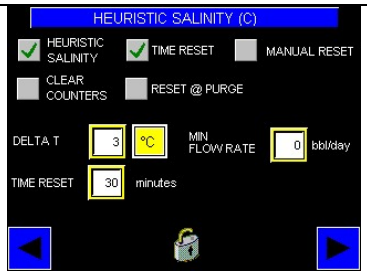	See section 5.4.8 Press [MENU] or Touch the Blue Arrow at the bottom Right corner to go back to the Main Screen

5.4.1. Main Screen

It shows the current Water Cut and Temperature

5.4.2. Detailed Screen

It shows the current Water Cut, Oil and Water Frequencies, Oil and Water Reflected Powers, Current Phase and Temperature. The graph icon on the top right shows the trend for Water Cut and Temperature. The graph icon at the bottom left shows Oil Frequency and Oil Reflected Power. The graph icon at the bottom right shows Water Frequency and Water Reflected Power.

- Trend Graphs

There are 3 Trend Graphs in Full Range Analyzer. Touch the graph Icon located to the right of the Water Cut indication to see the Water Cut and Temperature Trend. Touch the graph icon at the left of the Oil Frequency box to see the Oil Frequency and Reflected Power trend. Touch the icon at the right of the Water Frequency box to see the Water Frequency and Reflected Power trend. If the touch-screen is not accessible, press [SELECT] once to see the Water Cut and Temp trend in hours, press [SELECT] again to see the Water Cut and Temperature Trends in Minutes. Press [SELECT] again to see the Oil Frequency and Reflected Power trend in Hours, press [SELECT] again to see the Oil Frequency and Reflected Power trends in minutes. Press [SELECT] again to see the Water Frequency and Reflected Power trend in Hours, press [SELECT] one more time to see the Water Frequency and Reflected Power trends in minutes.

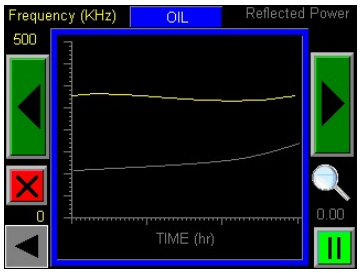

The following functions are only available by touching the screens and can't be done by using the push buttons. The "X" button erases the logged data and resets the screen. The magnifier button changes the time scale from hours to seconds. The button with two bars pauses the trend. The two big buttons with arrows pointing to the left and right move the trend forward or backwards (when there is more than one screen of data collected). The small arrow on the lower left corner exits the trend screen and goes back to the previous screen.

5.4.3. Average Temperature Screen

This screen shows the current temperature and the 24 hours average temperature since the last time the RESET button was pressed. If for example the average is reset at 10:00 AM, then the analyzer will average the temperature readings for 24 hours and it will reset itself every day at 10:00AM.

5.4.4. Adjustments Screen number 1

This screen allows the user to change configuration parameter like: Temperature Adjust, Phase Holdover and Number of samples. All the values in the text boxes can be edited.

C/°F Button: Allows the user to change the temperature units.

Phase Holdover: Sometimes the process fluids change from water to oil phase and vice versa in short periods of time. The analyzer will not change the curves that are being used for the calculation until the current phase change is not verified for at least a certain number of samples. Phase Holdover is the consecutive number of samples that the analyzer will wait until the phase is changed.

Number of Samples: is the number of samples computed to calculate the water cut by averaging. This number could be anything from 1 to 300. If 1 is used, the reading will be unfiltered.

Stream: Actuating this button will show the Stream Configuration screen (See next section).

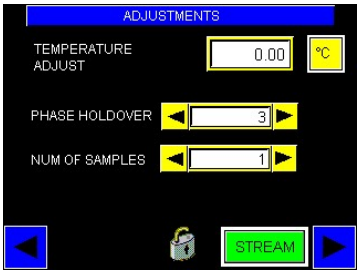

5.4.4.1. Stream Configuration Screen

The analyzer has 60 memories called “Streams”. All the parameters in this screen are “stream dependent”. This means that different parameters can be stored for different streams (Wells, production pipelines, production areas, etc). To change the current stream just enter the value on the Stream text box.

The “OIL CAL” Button access a very important screen that performs an automatic calculation of the Oil Adjust parameter. (See section for more information about the Oil Cal procedure).

The “WATER CAL” button access a very important screen that is used to calculate the current salinity by introducing the actual water cut. (See section for more information about the Water Cal Procedure).

The 2 check marks “Oil” and “Water” will force the water cut calculation to be done with the Oil or the Water calibration curves regardless of the Phase Detection Routine (See section 3.3).

Oil adjust is an offset added to the calculated water cut on the oil phase only (See section). This offset doesn’t affect the water cut calculated while the process is in the water phase. For adjustments on the water phase use only the water Salinity.

Water Adjust is an offset added to the calculated water cut. Don’t use the Water Adjust parameter unless instructed by Phase Dynamics personnel.

Salinity: Selects the calibration curve use to calculate water cut while the process is in the water phase or when the phase has been forced to water phase. This value has to be entered by the operator or calculated by means of the WATER CAL function (see section)

Water Cut Hi Alarm: Set point for the High Water Cut alarm. Accepted values are -100 to +100%.

Water Cut Lo Alarm: Set point for the Low Water Cut Alarm. Values accepted are -100 to +100%.

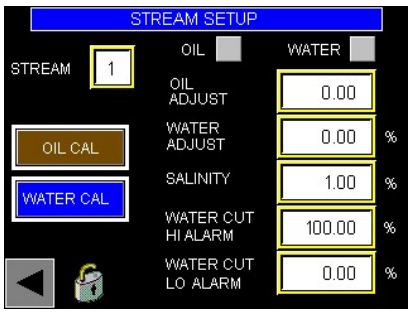

- Oil Cal

Select the Stream number (memory) where you want to perform and store the Automatic Calibration in the “Stream Adjustments” screen. Then activate the OIL CAL button to show the Auto Adjust (Oil Phase) screen. Ask a helper to take a sample and at the same time activate the button “CAPTURE”. The button will become red and the message “Ready for Capture” will change to “Capturing”. When the helper finished extracting a sample, activate the “STOP” button. The button will become red for a couple

of seconds and then will go back to yellow. The Capture Date and time at the bottom will now be replaced for the time and date the capture was taken.

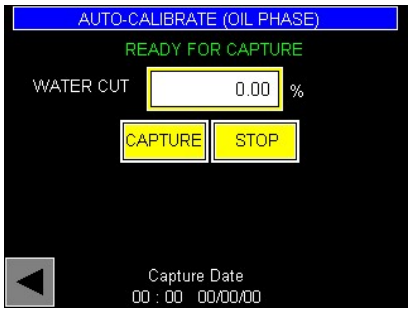

After the capture has been finished, the screen will look like this:

Now the capture date is showing the date and time the sample was taken. At this point the analyzer can be brought back to the main screen for regular operation. Remember to save configurations so this captured data is not lost (Section 5.5.2.7). After the sample has been taken to the laboratory for analysis, and the result has been obtained, go back to the Stream Adjustments screen (section 5.4.4.1). MAKE SURE you select the stream where the sample corresponding to the laboratory result was stored. Activate the OIL CAL button. Now you can enter the result from the lab in the WATER CUT text box. The analyzer will automatically calculate the "Adjust Oil" that was necessary to match the analyzer reading with the sample result the day it was taken. This new value of OIL ADJUST will be stored in the current Stream (memory).

- Water Cal

Select the Stream number (memory) where you want to perform and store the Automatic Salinity Calibration in the "Stream Adjustments" screen. Then activate the WATER CAL button to show the Auto Adjust (Water Phase) screen. Ask a helper to take a sample and at the same time activate the button "CAPTURE". The button will become red and the message "Ready for Capture" will change to "Capturing". When the helper finished extracting a sample, activate the "STOP" button. The button will become red for a couple of seconds and then will go back to yellow. The Capture Date and time at the bottom will now be replaced for the time and date the capture was taken.

After the capture has been finished, the screen will look like this:

Now the capture date is showing the date and time the sample was taken. At this point the analyzer can be brought back to the main screen for regular operation. Remember to save configurations so this captured data is not lost (Section 5.5.2.7). After the sample has been taken to the laboratory for analysis, and the result has been obtained, go back to the Stream Adjustments screen (section 5.4.4.1). MAKE SURE you select the stream where the sample corresponding to the laboratory result was stored. Activate the WATER CAL button. Now you can enter the result from the lab in the WATER CUT text box. The analyzer will automatically calculate the "Salinity" that was necessary to match the analyzer reading with the sample result the day it was taken. This new value of Salinity will be stored in the current Stream (memory).

5.4.5. Adjustments Screen number 2

This screen allows the user to change the value of Oil Low, Oil High, Oil P0 and Oil P1. To understand these parameters please refer to "Phase Detection" on the section 3.3

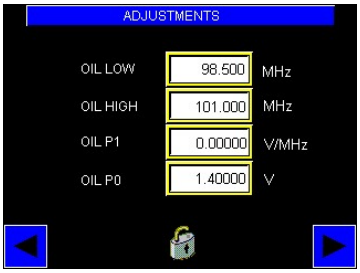

5.4.6. Adjustment Screen Number 3

This screen allows the user to change the value of:

Water Low And Water High: These are boundaries that are involved in the phase detection. Please refer to section 3.3

Oil Index: This is an offset in MHz added to the Oil frequency. It is normally used for trouble shooting. Please don't use it unless instructed by Phase Dynamics personnel.

Water Index: This is an offset in MHz added to the water frequency. It is normally used for trouble shooting. Please don't use it unless instructed by Phase Dynamics personnel.

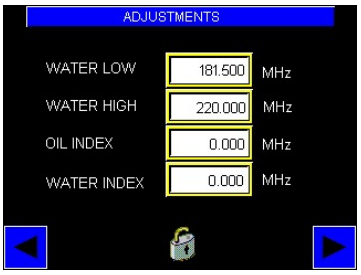

5.4.7. Adjustment Screen Number 4

These filters had not been implemented at the time this manual was written. Please don't do changes on this screen unless instructed by Phase Dynamics personnel.

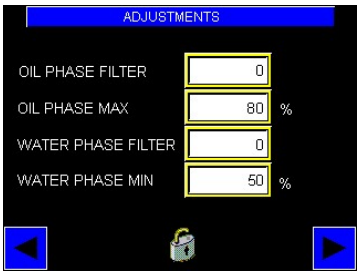

5.4.8. Heuristic Salinity© (Optional)

The Heuristic Routine© is a function that looks for the proper salinity while the process is in the water continuous phase using statistical evaluations. This screen is used to set all the parameters related with the Heuristic Salinity© Routine. The routine is stream dependent. This means that it has to be enabled for each individual stream where it is needed. The function of the check boxes and text boxes on this screen are:

HEURISTIC SALINITY: Enables the Routine for the current stream

TIME RESET: The routine resets itself after the selected amount of minutes. Enable this feature by checking this box. Enter the time window in the "Time Reset" text box.

MANUAL RESET: Resets the Heuristic Routine immediately.

CLEAR COUNTERS: Reset the totalizers and reset the Heuristic Routine simultaneously.

RESET AT PURGE: Not used in Full Range analyzers. It is only used in CCM applications

DELTA T: There is a reset on the Heuristic Routine triggered by temperature. This text box allows the user to enter the desired temperature change for a Heuristic Routine reset. A value of zero will disable the temperature reset.

MIN FLOW RATE: Below the flow rate entered in this text box the Heuristic Routine keep the last salinity that was determined. When the flow rate is over this value the routine resumes its normal operation.

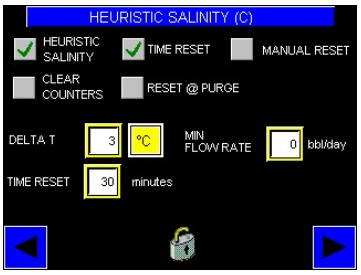

5.5. *Configuration screens*

Start on this Screen	
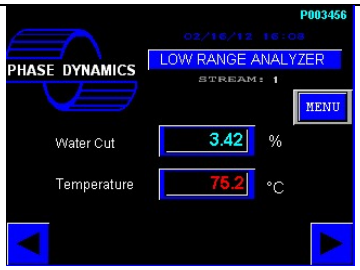	Touch the blue [MENU] button or press [SELECT] ↓
	Factory contact information Press the lower Right Corner Arrow or press [MENU] to continue. ↓

	To change the language just Activate the corresponding button. Press the lower Right Corner Arrow or press [MENU] to continue. ↓
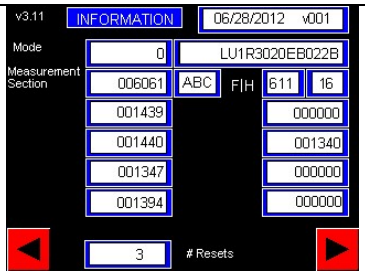	Analyzer and factory Information. None of these fields are editable. Press the lower Right Corner Arrow or press [MENU] to continue. ↓
	See section 5.5.1 Press the lower Right Corner Arrow or press [MENU] to continue. ↓
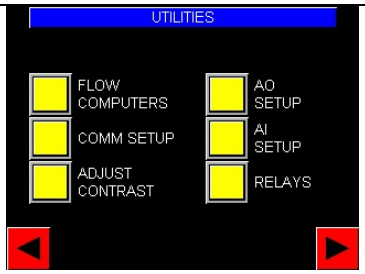	See section 5.5.2 Press the lower Right Corner Arrow or press [MENU] to continue. ↓
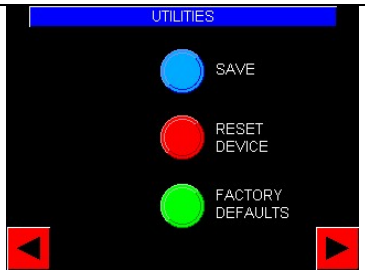	See section 5.5.2.7 Press the lower Right Corner Arrow or press [MENU] to go back to the Main Screen

5.5.1. Utilities

This screen allows the access to the Diagnostics Screen, Data logging Screen, Security Screen, Alarm Log and the Time and Date screen. Just activate the icon of the screen that needs to be accessed.

5.5.1.1. Diagnostics

Activating the Diagnostic Icon on will display the following screen:

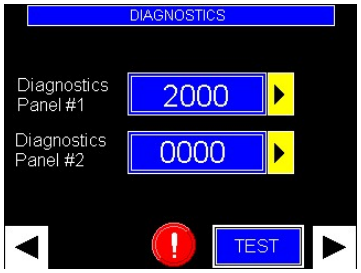

This screen shows to error codes. These codes correspond to two 16 bits diagnostic words. Each bit represents a different error. The codes on this screen are in Hexadecimal format.

Touching the "TEST" button will trigger a Self Test of the electronics.

The circle in the bottom center of the screen is an acknowledge button. When there are no errors its color is green. When there are or there were errors, it is red and it has an exclamation mark on it. Pressing it will acknowledge all the errors and it will become green again. At the same time the error codes will be reset to zero. If the error/s is still present, then the button will become red again and the error code will change showing only the present errors.

Activating the grey arrow on the bottom right corner will display the two detailed diagnostic screens. Pressing the grey arrow will navigate from one to the other. The errors that are still not acknowledged have a red button. All the others are green. Touch the individual red buttons to acknowledge that particular error. If the error is not longer present, the button will become green. Pressing the red circle in the bottom will acknowledge all the errors at the same time.

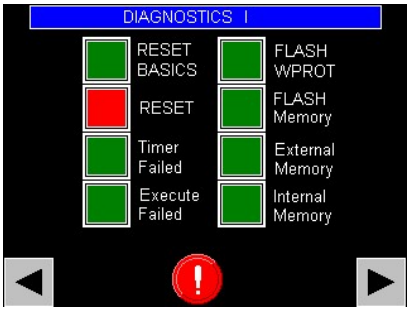

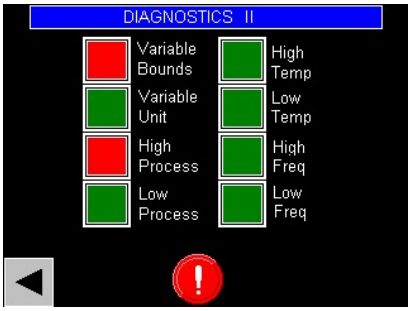

Touching the yellow arrow at the right of the two hexadecimal diagnostic words will show the 2 masking screens. In these screens each individual error can be masked. For example, each time the calculated water cut is below zero, the errors Variable Bounds and Low Process will be activated. They will stay on that state even when the water cut goes back to normal until they are acknowledged by the user. These two errors can be masked so they don't are not longer displayed by the analyzer. To mask them, just access the mask screen and touch the corresponding error. The labels of the masked errors are yellow. The unmasked ones are red. The following are the 2 masking screens:

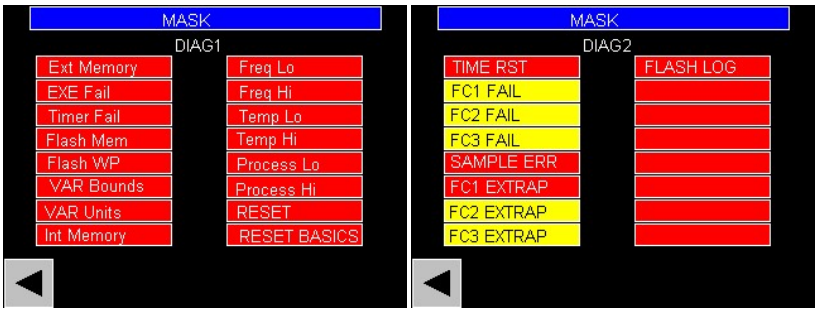

5.5.1.2. Alarm Log

The alarms are logged so the user can review them. To access them just activate the "Alarm Log" icon on the Utilities Screen. A screen like this will be displayed:

This screen shows a list of alarms, the time they happened and the time they recovered. To select a particular item in the list, touch "SEL". The first item will be highlighted:

Touch the vertical arrows to move up or down in order to select the item that needs to be deleted, acknowledge or see in more detail. After the item has been selected, touch the DEL button to remove it from the list. Press ALL to delete all the alarms at the same time. Touch the magnifier to see the details for the highlighted alarm. For example selecting the RESET alarm and touching the magnifier will show the following screen:

The alarm can be acknowledged in this screen by touching the ACKNOWLEDGE button.

5.5.1.3. Security

Touch the "SECURITY" icon to access this screen:

Touch the "LOCK" button to lock the screen. The button will become red. To unlock the screen press the code 1234 (for release 6.09 or older) or 1357 (for release 6.10 and newer). The default factory password can be changed when the screen is unlocked by typing a new password on the "CHANGE PASSWORD" text box.

5.5.1.4. Time and date

Touch the "TIME & DATE" icon to see or change the current time and date.

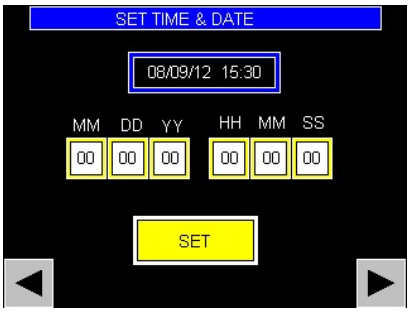

Touch the text boxes in sequence to enter the new time and date. A little keypad will allow the user to enter the new values. After all the numbers have been entered, press "SET".

5.5.1.5. Touch-Screen Data Logging

The touch screen can log data. There are 4 different log files that can be created.
Periodic: is a fix list of 30 variables. They are fixed integer values.
Changes: Every time a configuration is changed, it will be saved in this log
Errors: It is a Log of all the errors and alarms

Custom: This is a log of 30 variables that can be selected for special conditions. Contact factory if something else than the Periodic list of variables is needed.

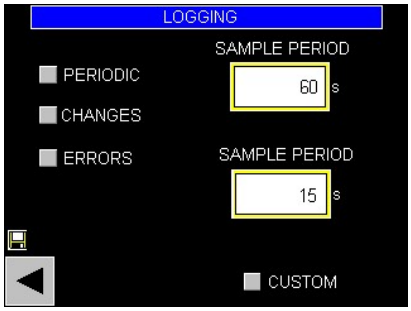

The logged values are scaled. For example is PERIODICS is checked, a file called "Log20.csv" will be created on the compact flash memory card inserted in the touch screen. The file is a comma separated values. Each column has a label and each row a time stamp. The values are scaled using the maximum and minimum ranges to get a maximum integer value of 30000 (The touch screen only log integers). The parameters that are logged are:

FreqO (Oil Frequency)	Re-scaled frequency (MHz) = value * 1000/30000 = Value /30 As an example if the value in the FreqO is 6601, the real Oil frequency is 6600 / 30 = 220.000 MHz
IPO (Incident Power Oil)	Re-scaled Incident Power Oil (V) = value * 5/30000 = Value /6000
RPO (Reflected Power Oil)	Re-scaled Reflected Power Oil (V) = value * 5/30000 = Value /6000
FreqW (Water Frequency)	Re-scaled frequency (MHz) = value * 1000/30000 = Value /30
IPW (Incident Power Water)	Re-scaled Incident Power Oil (V) = value * 5/30000 = Value /6000
RPW (Reflected Power Water)	Re-scaled Reflected Power Oil (V) = value * 5/30000 = Value /6000
Process (Water Cut)	
Temperature	Re-scaled temperature (in the selected units) (Maximum Temp – Min temp)/30000 – Min Temp The defaults values for Max and Min temperature are 1000°C and -273.15 °C. In this case to re-scale use Temperature = 1273.15/30000 – 273.15
Level Set point	Non applicable to this model
Level	Non applicable to this model
Pressure Set point	Non applicable to this model
Pressure	Non applicable to this model
Gas Valve	Non applicable to this model
Liquid Valve	Non applicable to this model
Flow	Non applicable to this model
Oil Flow	Non applicable to this model
Gas Flow	Non applicable to this model

5.5.1.6. USB Data Logging (Optional)

The latest model of motherboard (PN 2000-00072-000A) in combination with the latest Communication Board (PN 2000-00067-000A) and the firmware version starting at 6.15.07

allows the data logging of 50 different variables in floating point format in a USB flash drive. The USB connector is located on the motherboard and it is identified as J13 (See picture below).

Touching the Data logging icon on the "Utilities" screen will access the Flash Drive Logging screen:

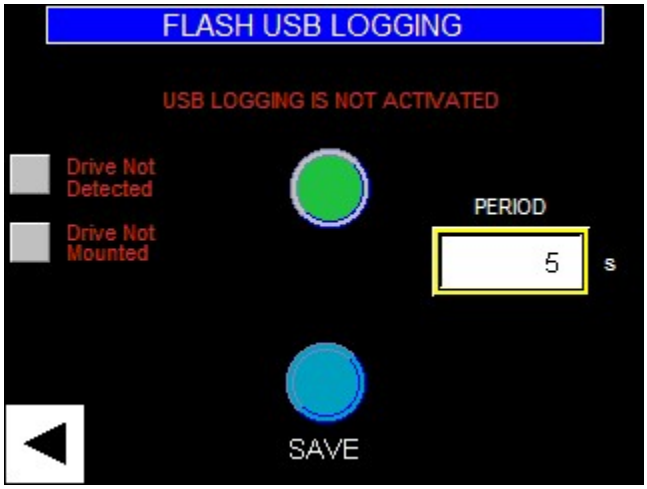

Initially with no drive connected there are 2 red messages. One indicates that "No Drive is Detected" and the other indicates that "No Drive is Mounted". Insert a USB flash drive on the connector identified as J13 (See picture below)

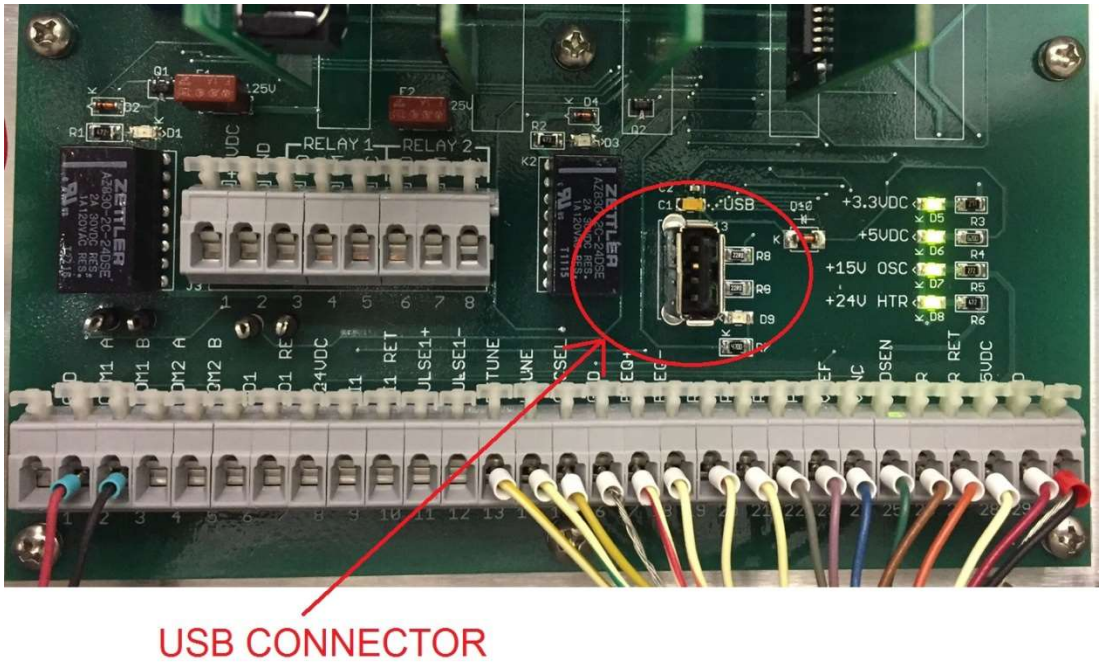

Then select the period for the logging (2 to 120 seconds). Then press the green button to activate the data logging. After a few seconds the flash drive will be detected and mounted. The red text and the 2 grey buttons will turn green.

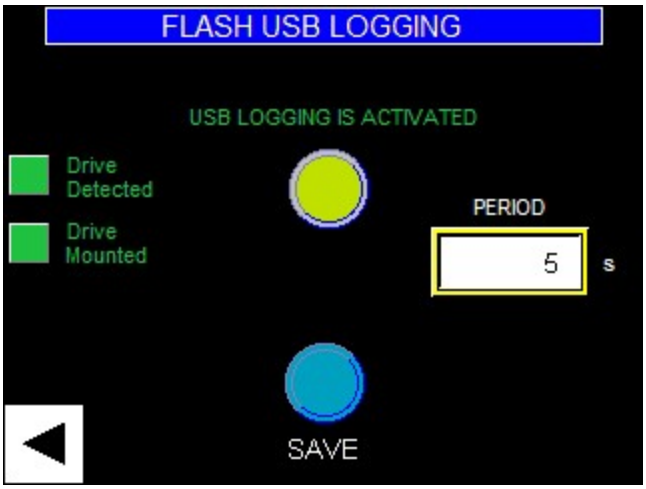

After finishing all the changes, press the SAVE button or the data logger will get deactivated if the device loses power.

ATTENTION:

When the Flash Drive needs to be removed, first the data logger has to be stopped by pressing the green button. If the flash drive is extracted without stopping the data logging, the file may get damaged and become unreadable.

The data logger will automatically create one new file per day starting at midnight. The name of the file is:

LOG_Month-day-year.csv
For example LOG_05-23-2017.csv

The file starts with a header that indicates all the variables recorded.

5.5.2. Peripherals Configuration

This screen conducts to the configuration screens for all the peripherals and the Flow Computer.

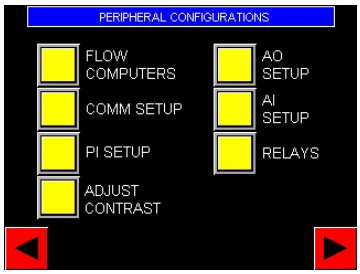

Activate the following buttons to go to:

FLOW COMPUTER: Configuration of the Flow Computer	see section 5.5.2.1
COMM SETUP: Communication Setup	see section 5.5.2.2
PULSE SETUP: Configuration of the Pulse/s input	see section 5.5.2.3
ADJUST CONTRAST: Adjust the contrast of the screen	see section 5.5.2.4
AO SETUP: Configuration of the Analog output/s	see section 5.5.2.5
AI SETUP: Configuration of the Analog Input/s	see section 5.5.2.6
RELAYS: Configuration of both relays	see section □

5.5.2.1. Flow Computer

Activate this button to see all the Flow Computer information and configurations.

Activate the FLOW COMPUTER button to access this subset of screens ↓	
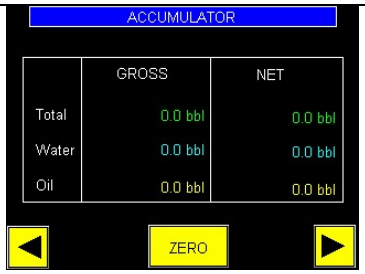	Shows the Gross and Net accumulated volume in the selected units. Press ZERO or press [ENTER] to reset the Totals. See section 5.5.2.1.10 if Net calculations are used. Press the lower Right Corner Arrow or press [MENU] to continue.
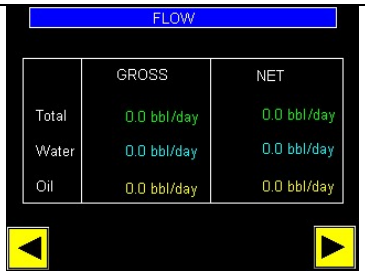	Shows the Gross and Net flow rates in the selected units. See section 5.5.2.1.10 if Net calculations are used. Press the lower Right Corner Arrow or press [MENU] to continue.

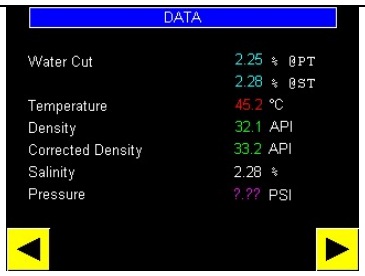	It shows current data values Press the lower Right Corner Arrow or press [MENU] to continue.
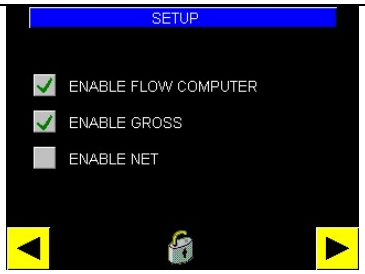	Allows the user to enable the Flow Computer, The Gross Calculation and the Net Calculation. See section 5.5.2.1.10 if Net calculations are used. Press the lower Right Corner Arrow or press [MENU] to continue.
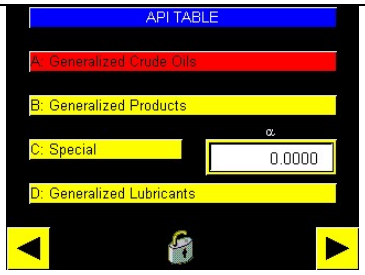	Allows the user to select the API Table that will be used to convert densities from process condition to standard conditions and vise versa on the density correction routine. The default selection is Table A: Generalized Crude Oils. To change the selection, touch the label or press [SELECT] repeatedly until the blue index points the desired table and then press [ENTER]. Press the lower Right Corner Arrow or press [MENU] to continue.
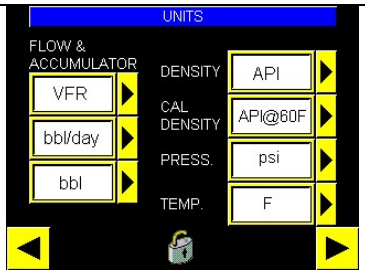	Allow the user to select the units for each variable. Press the lower Right Corner Arrow or press [MENU] to continue.
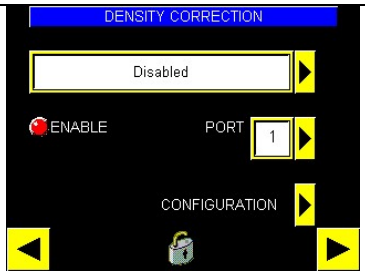	This screen allows the user to enable the Density Correction Function and select the source for an external density signal. Press the lower Right Corner Arrow or press [MENU] to continue. For more information on the density correction routine see Chapter 8.

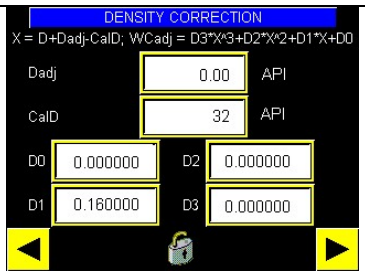	This screen is used to modify the coefficients used by the Density Correction Function. Press the lower Right Corner Arrow or press [MENU] to continue.
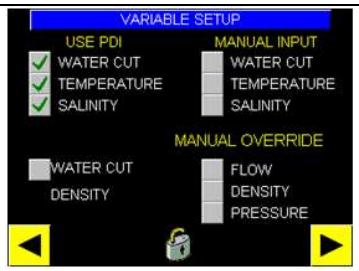	See section 5.5.2.1.9 Press the lower Right Corner Arrow or press [MENU] to continue.
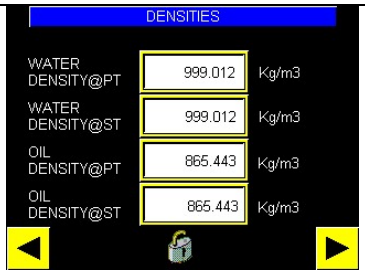	See section 5.5.2.1.10 Press the lower Right Corner Arrow or press [MENU] to continue.
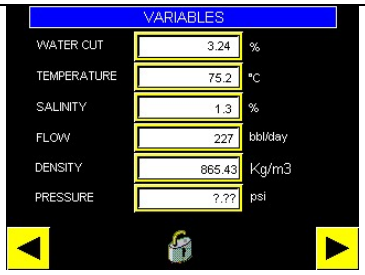	This screen is used to enter values for some variables manually. To do this, the variable has to be selected as a manual input on the Variable Setup Screen. Press the lower Right Corner Arrow or press [MENU] to continue.
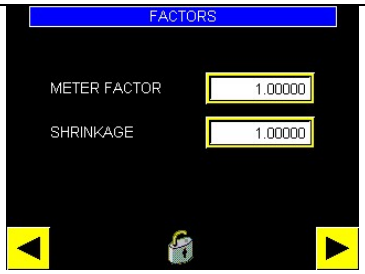	These two factors are part of the API calculations. The meter factor is a correction factor for the flow meter. The Shrinkage factor is the volume reduction when the oil is taken from the process conditions to standard conditions due to the flashing of the light hydrocarbons. Press the Lower Right corner Arrow or press [MENU] to go back to the Peripheral Configuration screen

5.5.2.1.1. Accumulator

Shows the Gross and Net accumulated volume in the selected units. Press ZERO or press [ENTER] to reset the Totals. See section 7.1.4.2.1.10 if Net calculations are used.

5.5.2.1.2. Flow Rates

Shows the Gross and Net flow rates in the selected units. Press ZERO or press [ENTER] to reset the Totals. See section 7.1.4.2.1.10 if Net calculations are used.

5.5.2.1.3. Data

It shows current data values.

5.5.2.1.4. Setup

Allows the user to enable the Flow Computer, The Gross Calculation and the Net Calculation. See section 7.1.4.2.1.10 if Net calculations are used.

5.5.2.1.5. API Table

Allows the user to select the API Table that will be used to convert densities from process condition to standard conditions and vise versa. The default selection is Table A: Generalized Crude Oils. To change the selection, touch the label or press [SELECT] repeatedly until the blue index points the desired table and then press [ENTER].

5.5.2.1.6. Units

Allow the user to select the units for every variable.

5.5.2.1.7. Density Correction

This screen allows the user to enable the Density Correction Function and select the source for an external density signal. See Section 5 “Density Correction” for more information.

5.5.2.1.8. Density Correction Coefficients

This screen is used to modify the coefficients used by the Density Correction Function. See chapter 5 for more information on Density Correction.

5.5.2.1.9. Variable Setup

This screen allows the selection of the variables used for the Flow Computer. These variables are for the exclusive use of the flow computer. For example if the check box Water Cut Manual Input is checked, the manually entered Water Cut will be used for the Flow Computer calculations only. The Water Cut shows on the main screen will be the water cut measured by the Phase Dynamics analyzer. When a variable is entered via MODBUS®, then the corresponding check box has to be checked too. A MODBUS® writing is considered a manual input. For example when a density will be written via MODBUS® to be used for density correction, then the check box “Override Density” has to be checked.

5.5.2.1.10. Densities

The densities in this screen are used to perform the Net calculations. If Net calculations are required, make sure to enter the proper densities for the process. The following equations are used for the calculation of Oil and Water flow rate and totals

$$Gross\ Oil\ Flow\ Rate\ = Total\ Flow\ Rate\ \times (1 - Water\ Cut)$$

$$Gross\ Oil\ Total\ = \int_0^t Gross\ Oil\ Flow\ Rate\ \times dt$$

$$Gross\ Water\ Total\ = \int_0^t Gross\ Water\ Flow\ Rate\ \times dt$$

$$Net\ Oil\ Flow\ Rate\ = \frac{Gross\ Oil\ Flow\ rate\ \times Density\ of\ Oil\ at\ Process\ Temperature}{Density\ of\ Oil\ at\ Standard\ Temperature}$$

$$Net\ Water\ Flow\ Rate\ = \frac{Gross\ Water\ Flow\ rate\ \times Density\ of\ Water\ at\ Process\ Temperature}{Density\ of\ Water\ at\ Standard\ Temperature}$$

$$Net\ Oil\ Total\ = \frac{Gross\ Oil\ Total\ \times Density\ of\ Oil\ at\ Process\ Temperature}{Density\ of\ Oil\ at\ Standard\ Temperature}$$

$$Net\ Water\ Total\ = \frac{Gross\ Water\ Total\ \times Density\ of\ Water\ at\ Process\ Temperature}{Density\ of\ Water\ at\ Standard\ Temperature}$$

5.5.2.1.11. Variables

This is screen is used to enter values for some variables manually. To do this, the variable has to be selected as a manual input on the Variable Setup Screen (Section5.5.2.1.9).

5.5.2.1.12. Factors

These two factors are part of the API calculations. The meter factor is a correction factor for the flow meter. The Shrinkage factor is the volume reduction when the oil is taken from the process conditions to standard conditions due to the flashing of the light hydrocarbons.

5.5.2.2. Communications Setup

Activate the COMM SETUP button to access this subset of screens	
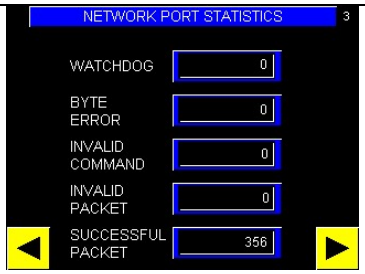	There are 4 screens like this. One for each port. They show the current status of the communications. Press the lower Right Corner Arrow 4 times or press [MENU] 4 times to continue. ↓
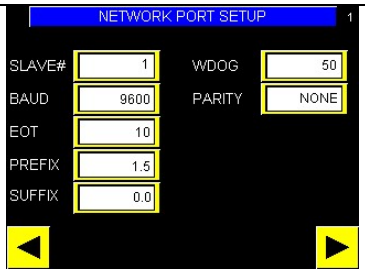	There are 4 screens like this. One for each port. They allowed the user to configure the parameters of the communications. Press the lower Right Corner Arrow 4 times or press [MENU] 4 times to continue. ↓
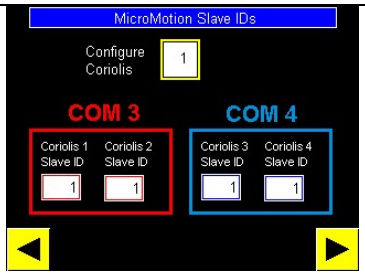	See section □ Press the lower Right Corner Arrow or press [MENU] to continue. ↓
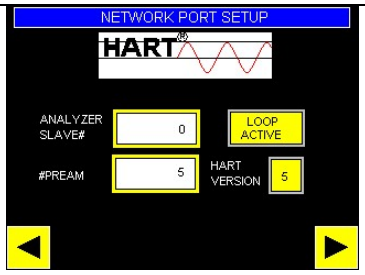	See section □ Press the lower Right corner Arrow or press [MENU] to go back to the Peripheral Configurations Screen

- Network Port Statistics

There are 4 screens like this. One for each port. They show the current status of the communications.

- Network Port Setup

There are 4 screens like this. One for each port. They allowed the user to configure the parameters of the communications.

- Slave ID

Enter here the slave address desired for this device on the network. Values from 1 to 255 are allowed.

- Baud Rate

Available options are 300, 1200, 2400, 4800, 9600, 19200, 38400, 57600 and 125200.

- Prefix (ct)

The prefix is the time in CT (Character Time) that processor drives the network before starting a transmision. Values from 0.0 to 255.0 are allowed.

- Suffix (ct)

The Suffix is the time in CT (Character Time) that processor drives the network after finishing a transmision. The Default value is 0.

- Reply Delay

Enter here the desired reply delay in milliseconds. Values from 0 to 255 are allowed. The default value is 10.

- Watchdog

The Watchdog is the time in CT (Character Time) the processor will wait before dropping an incomplete received transmision packet. Values from 1.5 to 255.0 are allowed. The default value is 50.

- Parity

Available values are:

  - NONE
  - ODD
  - EVEN
  - MARK/1
  - SPACE/0

  - Retry Time (s)

Enter here the desired retry time in seconds. Values from 0.1 to 10 are allowed. The default value is 0.4.

ATTENTION:

After changing ANY parameter in ANY communication port, the configuration have to be saved and then the unit has to be power cycle to re-open the ports with the new configuration.

- Micro Motions Slave IDs

This screen automatically configures Micro Motion® Coriolis Meters connected to the ports 3 and/or 4. The Coriolis Meters are used for density correction and on the CCM® application.

- HART®

This screen allows the user to configure all the parameters for the HART® communication. HART® is not a standard feature in our analyzers. If HART is needed, it has to be specifically ordered.

5.5.2.3. Pulse Input

This submenu has only 2 screens. The first one selects the Input to be configured. On Enhanced Electronics there is only 1 Pulse Input. In the Expanded Electronics there are 3. The analyzer automatically detects the presence of 1 or 3 Pulse Inputs. Activate the button corresponding to the Pulse Input to be configured to go to the configuration Screen.

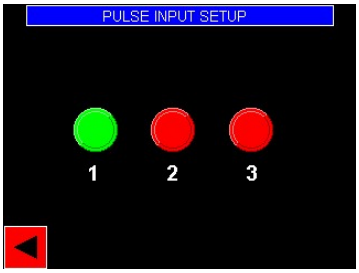

Check the PULSE ENABLE check mark and set the proper amount of pulses per volume units. The units can be changed on the FLOW COMPUTER configuration Screen. This flow rate is associated to the variable FC1 Flow Rate.

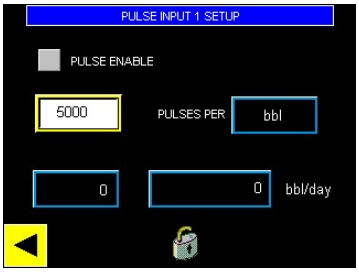

5.5.2.4. Adjust Contrast

This screen can only be operated by touch. It allows the user to change the Contrast of the Touch-Screen. Just touch the button to open the pop up screen that will show on the upper left corner. Then touch the Arrows at the left to decrease the brightness or touch the Arrows on the right to increase the brightness. When finished press the “X” to close the pop up screen.

5.5.2.5. Analog Output Set Up

There is 1 analog output in the Enhanced Electronics and 5 in the Expanded Electronics. Activate the AO SETUP button to enter this submenu. Then action the button of the Analog Output that needs to be configured.

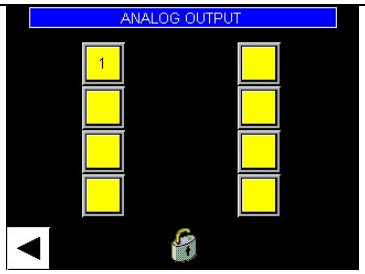	See section 5.5.2.5.1 Press the lower Right Corner Arrow or press [MENU] to continue.
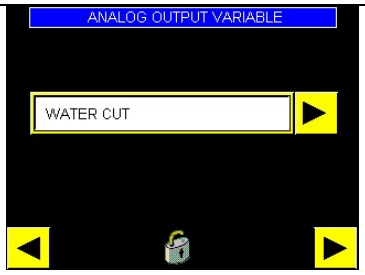	See section 5.5.2.5.2 Press the lower Right Corner Arrow or press [MENU] to continue.
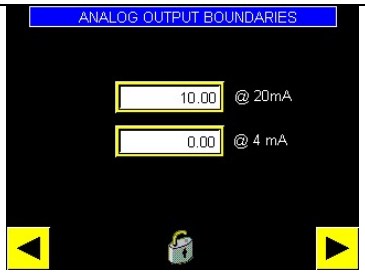	See section 5.5.2.5.3 Press the lower Right Corner Arrow or press [MENU] to continue.
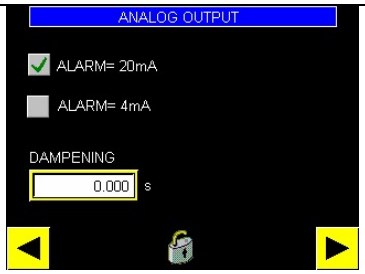	See section 5.5.2.5.4 Press the lower Right Corner Arrow or press [MENU] to continue.
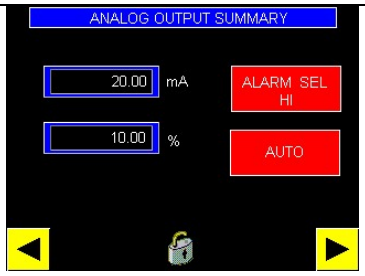	See section 5.5.2.5.5 Press the lower Right Corner Arrow or press [MENU] to continue.

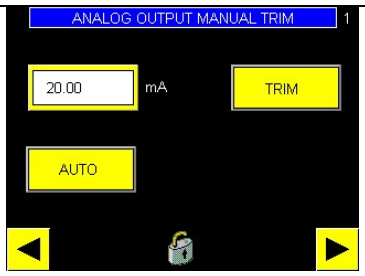	See section 5.5.2.5.6 Press the lower Right corner Arrow or press [MENU] to go back to the Analog Output Configuration Screen

5.5.2.5.1. Analog Output selection

This screen allows the selection of the Analog Output that needs to be configured. In Enhanced electronics there is only one and in the Expanded Electronics there are 5. The analyzer automatically detects the presence of the analog outputs and enables the corresponding amount of buttons. On the screen shown, only one Analog Output is present (Enhanced Electronics). Action the button corresponding to the Analog Output that needs to be configured. Don't forget to save configurations if any change is made. A little floppy shows in some of the screens as a reminder than a configurations has not been saved.

5.5.2.5.2. Analog Output Variable

The Analog Outputs can be assigned to a long list of variables such us Water Cut, Flow Computer Flow Rate, Flow Computer Gross Oil Flow Rate, etc. Browse the list and select the desired one. When done, action the bottom left arrow to go to the next screen.

5.5.2.5.3. Analog Output Boundaries

This screen is dependent of the previous one and it is used to select the upper and lower boundaries of the analog output. More specifically, it allows the user to select the value of the variable that corresponds to a current output of 4mA and the value that corresponds with 20mA. This is independent of the range of the analyzer. For example if the analyzer is 0 to 10% water cut, the boundaries can be selected as 0 to 5%.

5.5.2.5.4. Analog Output Alarms and Dampening

This screen allows the selection of the analog output value when the water cut can't be calculated do to an error. In these cases the Water Cut is shown has a question mark on the screen and the analog output goes to the value selected by the checkmark in this screen. This screen also allows the edition of the current value for the dampening. The dampening it the amount of seconds the variable is averaged before the value is seen in the analog output. The default value is zero (no dampening)

5.5.2.5.5. Analog Output Summary

This screen shows the selected values for the analog output boundaries, the selected alarm level and the status (Automatic or Manual).

5.5.2.5.6. Analog Output Manual Trim

This screen has two main functions. One is to trim the selected Analog Output. The other is to force the value of the selected Analog Output to test the loop and the connection with the control room.

To force a current value activate the “AUTO” button. It will change to “MANUAL”. At this time the desired value to be forced can be entered in the text box. The forced value can be measured with a milliamp meter connected in series with the current loop. (See section 2.6.1 for connections). When done forcing currents activate the MANUAL button. It will change back to AUTO.

To TRIM the selected Analog Output action the TRIM button. The following screen will show:

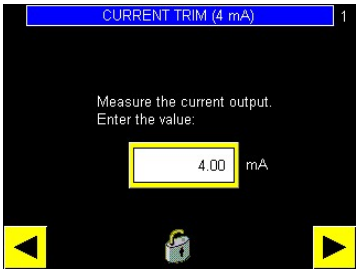

Disconnect any wiring on the selected Analog Output. Connect a milliamps meter on the corresponding terminals. See Section 2.6.1 for connection diagrams. Measure the current and enter the value in this screen. After that activate the lower right arrow. The screen that allows trimming the 20mA will show:

Measure the current and enter the measured value in the text box. Then activate the lower right arrow to finish the process.

Attention:

Always trim both ends of the Analog Output

5.5.2.6. Analog Input Set Up

There is 1 analog input in the Enhanced Electronics and 5 in the Expanded Electronics. Activate the AI SETUP button to enter this submenu. Then action the button of the Analog Input that needs to be configured.

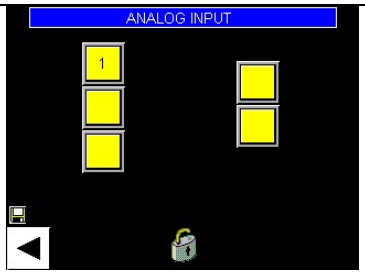	See Section □ Press the lower Right Corner Arrow or press [MENU] to continue. ↓
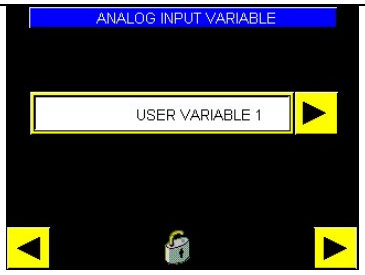	See section □ Press the lower Right Corner Arrow or press [MENU] to continue. ↓
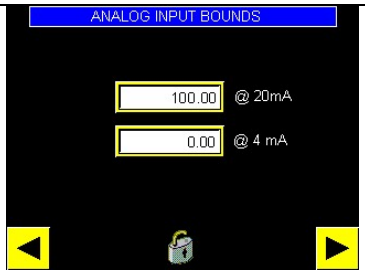	See section □ Press the lower Right Corner Arrow or press [MENU] to continue. ↓
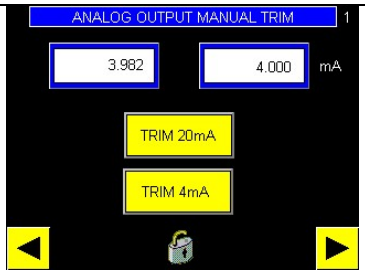	See section □ Press the lower Right corner Arrow or press [MENU] to go back to the Analog Input Configuration Screen

- Analog Input Selection

This screen allows the selection of the Analog Output that needs to be configured. In Enhanced electronics there is only one and in the Expanded Electronics there are 5. The analyzer automatically detects the presence of the Analog Inputs and enables the corresponding amount of buttons. On the screen showed, only one Analog Input is present (Enhanced Electronics). Action the button corresponding to the Analog Input that needs to be configured to advance.

- Analog Input Variable

The Analog Inputs can be assigned to a long list of variables such us Flow Computer Density, Flow Computer Flow Rate, etc. Browse the list and select the desired one. The default selection is USER VARIABLE 1. This variable is just a place holder and is not actually used for anything. When done, action the bottom left arrow to go to the next screen.

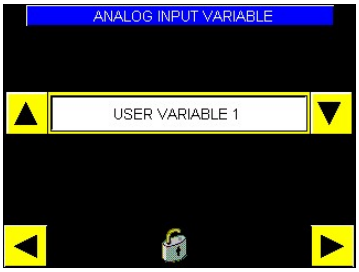

- Analog Input Boundaries

This screen is dependent of the previous one and it is used to select the upper and lower boundaries of the selected Analog Input. More specifically, it allows the user to select the value of the variable that corresponds to a current output of 4mA and the value that corresponds with 20mA.

- Analog Output Manual Trim

To TRIM the selected Analog Input disconnect any wires attached to this input and connect a 4-20mA simulator in its place (See section 2.6.1 for the wiring diagrams). Set the generator to output 4mA. The text box on the left will show the raw value measured by the analyzer. The text box on the right will show the value of the analog input with the current trimming applied. If this text box is reading 4.000 mA (+/- 0.005) then no trimming is necessary. Otherwise activate the TRIM 4mA button to trim. The text box at the left will show the same value but the one at the right will show 4.000mA (+/- 0.005)

After that, set the simulator to generate 20.000mA. Again the text box at the left will show the raw value and the one at the right will show the trimmed value. If the reading at the right is 20.000 (+/- 0.005) then no trimming is necessary. Otherwise, action the TRIM 20mA button to trim it. After that the text box at the right will show 20.000mA (+/-0.005)

- Relays Configuration

The analyzer has 2 relays. Both of them are configurable.

The first screen allows the selection of the relay to be configured and it also shows the relays status. If a button is red, then the corresponding relay is active. Otherwise, it will be gray.

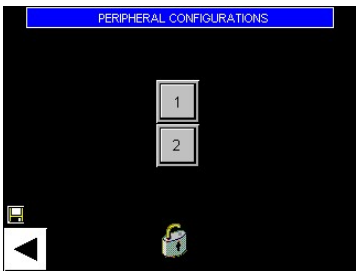

Activate the button of the relay that needs to be configured to enter this configuration submenu.

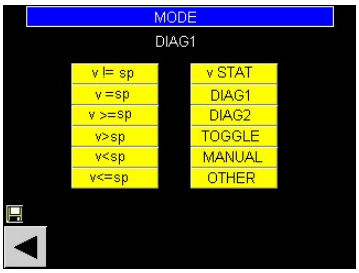

There are several ways or “modes” to operate the relays:

a) Comparison between a variable and a Set Point.

The options are:

V!= sp : Variable not equal to Set Point
V= sp: Variable equal to Set Point
V>= sp: Variable greater or equal than Set Point
V > sp: Variable greater than Set Point
V<sp: Variable lesser than Set Point
V<= sp: Variable lesser or equal to Set Point

After selecting one of these modes, the next screen will allow to select the variable. There is a long list of variables than can be selected such us Water Cut (the most used), Emulsion Phase, User Temperature, etc.

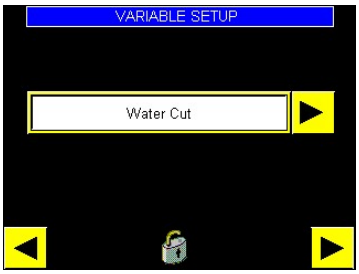

After selecting the variable, the next screen will allow the user to enter the Set Point.

b) Status of a variable

Every variable has a 16 bits Status Word. Only 4 of these bits are used.

Bit 0	Not used
Bit 1	Not used
Bit 2	Not used
Bit 3	Not used
Bit 4	Not used
Bit 5	High Boundary
Bit 6	Low Boundary
Bit 7	Hi Alarm
Bit 8	Lo Alarm
Bit 9	Not used
Bit 10	Not used
Bit 11	Not used
Bit 12	Not used
Bit 13	Not used
Bit 14	Not used
Bit 15	Not used
Bit 16	Not used
Bit 17	Not used

If this case has been selected, the next screen will allow the selection of the variable.

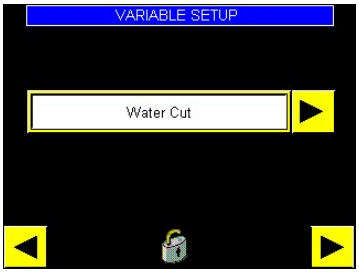

Browse through the list of variables by activating the yellow button at the right of the text box.

The next screen will allow the user to set the Mask to be used over the status word. The Mask is a 16 bits register that is used to performed a logic AND with the Status Word. If one or more of the status bits is not desired it can be ignored by making the corresponding bit in mask equal to zero. The default value for the mask is FFFF which will not hide any of the bits of the status word. Activating the arrow at the right of the text box will show the detail masks screen.

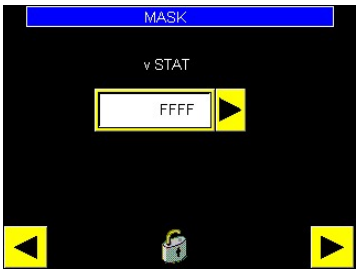

The Masks Screen is a very easy way to select the bits that needs to be masked. Just touch the Status or press [SELECT] as needed until the index points to the desired bit and press [ENTER] to activate that particular mask. The color red means that the mask is not active so that particular bit is not filtered. A yellow color means that that particular bit will not activate the Status of this variable.

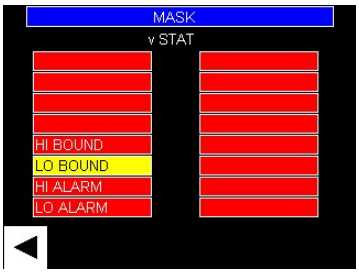

In the example screen only Low Boundaries status is going to be filtered. The other 3 will activate the status alarm and therefore the relay.

c) Diagnostics 1 and Diagnostics 2

There are two 16 bits diagnostics words. They are explained in the section 7.1.4.1.1. If any of these modes are selected then the next screen will show the Masks Screen. The color red means that the mask is not active so that particular bit is not filtered. A yellow color means that that particular bit will not activate this alarm.

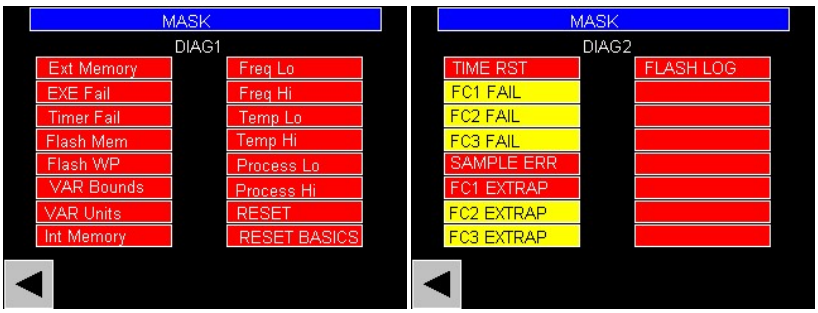

As an example if DIAG1 is the mode used and the Variable Boundaries (Water cut) is exceeded, then the relay will activate (unless that particular bit is masked).

d) Toggle:

If this option is selected, the corresponding relay will start switching three times per second.

e) Manual:

If this mode is used, the next screen will show a big button. Touching the button or pressing [ENTER] will toggle the relay status. This is useful when testing the connection with a control room.

f) Other:

This option is used when the relays are going to be activated via MODBUS®. See the MODBUS® addresses in section 0 to learn how to read or write the coils that control the relays.

5.5.2.7. Save Configurations

This screen has three buttons. One is used to save configurations. The second one is to reset the device and the third one is to reset all the configurations to Factory Defaults. Every time a parameter is changed by the operator or by MODBUS®, a little floppy disk icon will show up in some of the screens. That is a reminder that there are configurations that need to be saved. If the analyzer loses power, all this non saved configurations will be lost. After the configurations is saved, the little floppy icon will disappear (this normally takes a couple of seconds). This configuration is stored as "User Configuration".

To save the configurations just activate the Blue Button that has a floppy icon in it. After a few seconds the floppy will disappear.

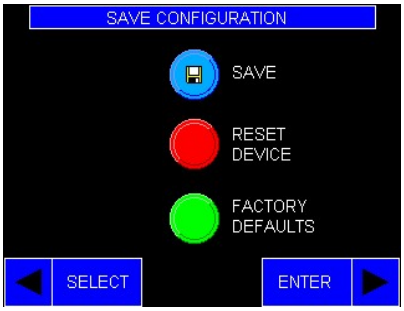

To reset the microprocessor, activate the RESET DEVICE red button. If some changes have been done in the configuration that have not been save, the microprocessor will reboot with the current User Configuration parameters that were last saved.

If the Factory Configuration needs to be recovered, just activate the FACTORY DEFAULS green button. Warning: The User Configuration will be lost. After activating the button, another screen will show asking for confirmation. Activate the Green YES button if you want to proceed or the Red NO button if you want to keep the current configuration.

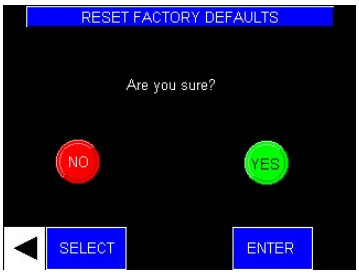

6. Operation

The Phase Dynamics Analyzers are calibrated at the factory over a broad range of water cuts, temperatures and salinities. These calibrations are converted into equations that are later saved into the microprocessor memory. The microprocessor reads frequencies, reflected powers and temperature from the measurement section, detects the phase and calculates water cut using the proper equations for the current phase.

When the process is in Oil Phase, the salinity of the water doesn't affect the measurement. The only factor that affects the readings on the Oil Phase is the density of the oil. The analyzers are calibrated with Oil with a density of 32 API. Heavier oils are seen by the analyzer as more water. The ratio is 0.16% water per each degree API or 0.0286% per each Kg/m3 change in density. This fact is corrected through a parameter called Oil Adjust. The temperature also has a little effect on the permittivity and on the geometric dimensions of the probe (expansion/contraction of the metal). For this reason the readings are also a function of the temperature.

For the Oil Phase then, the Water Cut is calculated as:

WC= $\mathscr{F}$\{Oil Frequency, Temperature\} + Oil Adjust

When the process is in the Water Phase, the microwaves behavior is affected by the conductivity of the water. During calibration several calibrations are performed with water with different contents of Sodium Chloride. The proper salinity has to be entered by the operator or has to be found by running the Water Calibration Routine. If Heuristic Salinity© (optional) is enabled, then the salinity is found by statistical calculations. As the conductivity of the water is also affected by temperature, then the water cut is also a function of the temperature. For the Water Phase the Water Cut is calculated as:

WC= $\mathscr{F}$\{Water Frequency, Salinity, Temperature\} + Water Adjust

Please don't use the parameter "Water Adjust" to adjust the water cut value unless specified by Phase Dynamics personnel. The adjustments of the water cut readings should be adjusted by modifying the entered Salinity.

To operate the analyzer is necessary to enter the proper Oil Adjust when the process is in the Oil Phase and the proper Salinity when the process is in the Water Phase. To make the operation easier when multiple streams are being measured, the Phase Dynamics analyzer has 60 memories called "Streams". Each memory (Stream) can save different sets of parameters like:

Salinity
Oil Adjust
Heuristic Salinity© (Optional) Enabled
Phase: Auto, Water or Oil
Water Cal Sample
Oil Cal Sample
Water Cut Hi Alarm
and
Water Cut Lo Alarm

If for example the analyzer is used for well testing and the following parameters are needed:

Well	Oil Adjust	Salinity	Phase
1	0.2	1.23	Auto
2	-0.1	1.20	Auto
3	0.0	0.95	Oil

There is no need to enter all these individual values every time a particular well is tested. All the operator needs to do is to select Stream 1 and enter a 0.2 in the Oil Adjust parameter, then 1.23 in the Salinity and make sure both check marks on the Phase detection are unchecked. Then repeat the process for stream 2 and 3 with the well specific values. After that is done, the operator just need to change the Stream number and the analyzer will recall the stored values.

Note: On analyzers with 4 lines LCD display there is no need to save configurations. Every time [ENTER] is pressed the user configurations are saved. On the Touch-Screen, every time some parameters are changed, they have to be saved (See Section 5.5.2.7 "Save Configurations"). The following sections show how to determine the needed values for Oil adjust and Salinity.

6.1. Offset (Adjust Oil) Calculation

There are 2 ways to calculate the necessary offset: Manually or Automatically.

6.1.1. Manual Calculation

Please note that in the 4-lines LCD Display the offset it called Adjust (Oil) while in the Touch-Screen is called Oil Adjust. We will refer to this parameter as Oil Adjust in this section. The calculation of this offset is very easy. For this calculation it is necessary to know the current value of "Oil Adjust". Make yourself familiar with the operation of the analyzer screen type that you have (4 lines LCD or Touch-Screen in Section 4 and Section 5).

a) Make sure the "Stream" (memory) that you normally use for the current well is selected.
b) Make sure the process fluids are in the Oil Phase (Phase is indicated on the main screen).
c) Prepare to take a sample
d) Wait for a steady reading on the analyzer
e) Take a sample and at the same time ask a helper to write down the analyzer reading. As an example let's say that the reading was 0.74%
f) Take the sample to the laboratory. For this example let's say the laboratory result was equal to 0.27%
g) Browse through the menu and find the current value of "Oil Adjust". For this example let's say it is equal to 0.42%

The raw water cut read by the analyzer was:

Raw Water Cut = Analyzer Reading –Oil Adjust

For this example

Raw water Cut = 0.74 – 0.42 = 0.32

The actual difference between the raw reading and the actual water cut (Lab result) is:

Difference = Lab Result – Raw Water Cut

For this example

Difference = 0.27 – 0.32 = - 0.05

This difference is the value we need the analyzer offset to be. Changing the offset to -0.05 will correct the measurement for this particular case.

The equation to calculate the new Adjust Oil value is then:

New Oil Adjust = Laboratory Result – Analyzer reading + Old Oil Adjust value

For this example:

New Adjust Oil = 0.27 – 0.74 + 0.42 = -0.05

Remember the Oil Adjust value is stored in the current "Stream". Changing the Stream number will change the Oil Adjust Value to the one preset for that particular Stream number.

6.1.2. Automatic Offset (Oil Adjust) Calculation in a 4-Lines LCD Display

The offset is called "Adjust (Oil Phase)" in this type of display. The analyzer has a routine that calculates the value of Adjust (Oil Phase) automatically liberating the operator from doing any calculations. Make yourself familiar with the operation of the 4-lines LCD at section 4.

Please follow this procedure to perform an automatic calculation:

a) Make sure the "Stream" (memory) that you normally use for the current well is selected.
b) Prepare to take a sample.
c) Ask helper find the "Capture (Oil Phase)" screen by browsing through the menu. If the process fluids are NOT in the Oil Phase, the message "Wrong Emulsion Phase" will be displayed. The automatic adjustment of Adjust (Oil Phase) can only be done when the fluids are in the Oil Phase.
d) Wait for a steady reading on the analyzer.
e) Ask your helper to initiate a data capture by pressing [ENTER] and at the same time take a sample.
f) After the sample is taken ask your helper to stop the data capture by pressing [ENTER] again. Make sure the data capture was at least 10 seconds long. The analyzer can be brought back to the main screen. The data capture is stored in the selected "Stream" number.
g) Take the sample to the laboratory.
h) When the result is obtained, make sure the Stream selected in the analyzer is the one that was used when the sample was taken. Remember that the data that was captured was saved on that particular Stream memory. If the analyzer is currently testing a well in a different stream, is better that you wait until the current test is finished before changing the stream number. It doesn't matter if the process fluid is now in the Oil Phase anymore.

i) Browse through the menu and find the "Cal (Oil Phase)". Enter here the laboratory result.
j) The analyzer will calculate the necessary "Adjust (Oil Phase)" and save it in the currently selected Stream.

6.1.3. Automatic Offset (Oil Adjust) Calculation in a Touch-Screen

The offset is called Oil Adjust in this type of display. The analyzer has a routine that calculates the value of Oil Adjust automatically liberating the operator from doing any calculations. Make yourself familiar with the operation of the Touch-Screen at section 5.

Please follow this procedure to perform an automatic calculation:

a) Make sure the "Stream" (memory) that you normally use for the current well is selected.
b) Prepare to take a sample.
c) Ask helper find the "Auto-calibrate (Oil Phase)" screen by browsing through the menu. If the process fluids are NOT in the Oil Phase, the message "Wrong Emulsion Phase" will be displayed. The automatic adjustment of Oil Adjust can only be done when the fluids are in the Oil Phase.
d) Wait for a steady reading on the analyzer
e) Ask your helper to initiate a data capture by actuating the "Capture" button and at the same time take a sample.
f) After the sample is taken ask your helper to stop the data capture actuating the "STOP" button. Make sure the data capture was at least 10 seconds long. The analyzer can be brought back to the main screen. The data capture is stored in the selected "Stream" number. The time and date of the capture will be shown at the bottom of the screen.
g) Take the sample to the laboratory.
h) When the result is obtained, make sure the Stream selected in the analyzer is the one that was used when the sample was taken. Remember that the data that was captured was saved on that particular Stream memory. If the analyzer is currently testing a well in a different stream, is better that you wait until the current test is finished before changing the stream number. It doesn't matter if the process fluid is still in the Oil Phase to enter the lab result.
i) Browse through the menu and find the Auto-Calibrate (Oil Phase) screen. Make sure the time stamp at the bottom matches the time and date your sample was taken. Enter here the laboratory result.
j) The analyzer will calculate the necessary Oil Adjust and save it in the currently selected Stream.

6.2. Salinity Determination

When the process fluids are in the Water Phase, the salinity of the water has to be determined in order to get a good measurement. The salinity can be obtained from a laboratory but this is not the best method. The laboratory measures the salinity concentration in the production water by titration and the result is expressed as total chlorides. This is the mix of all the chlorides present in the solution (Sodium Chloride, Potassium Chloride, Magnesium Chloride, etc). The Phase Dynamics analyzer is calibrated with Sodium Chloride only. As the measurement is affected by conductivity and not salinity, the conductivity of a mix of several

Chlorides is different of the conductivity of pure Sodium Chloride. For that reason the salinity measured by the laboratory is a good approximation but not the right number to operate the Phase Dynamics analyzer.

If you enter the proper salinity, the analyzer will calculate the proper Water Cut, but the opposite is also possible. If you enter the actual water cut, the analyzer will find the proper salinity to produce that reading. Our analyzer has a routine that can find the proper salinity to produce the right measurement. The routine is called "CAPTURE (WATER PHASE)" in the 4-lines LCD display and "AUTO-CALIBRATE (WATER PHASE) in the touch-screen.

6.2.1. CAPTURE (WATER PHASE) in a 4-lines LCD display

Please follow this procedure to perform an automatic Salinity Calculation:

a) Make sure the "Stream" (memory) that you normally use for the current well is selected.
b) Prepare to take a sample.
c) Ask helper find the "Capture (Water Phase)" screen by browsing through the menu. If the process fluids are NOT in the Water Phase, the message "Wrong Emulsion Phase" will be displayed. The automatic adjustment of the Salinity can only be done when the fluids are in the Water Phase.
d) Wait for a steady reading on the analyzer.
e) Ask your helper to initiate a data capture by pressing [ENTER] and at the same time take a sample.
f) After the sample is taken ask your helper to stop the data capture by pressing [ENTER] again. Make sure the data capture was at least 10 seconds long. After this, the time and date the sample was taken will be shown at the bottom of the screen. The analyzer can be brought back to the main screen. The data capture is stored in the selected "Stream" number.
g) Take the sample to the laboratory.
h) When the result is obtained, make sure the Stream selected in the analyzer is the one that was used when the sample was taken. Remember that the data that was captured was saved on that particular Stream memory. If the analyzer is currently testing a well in a different stream, is better that you wait until the current test is finished before changing the stream number. It doesn't matter if the process fluid is still in the Water Phase.
i) Browse through the menu and find the "Cal (Water Phase)". Enter here the laboratory result.
j) The analyzer will calculate the Adjust (Oil Phase) that was necessary to read the Water Cut that was obtained by the laboratory the day and time the sample was taken and it will save it in the currently selected Stream.
k) The analyzer will calculate the necessary Salinity and save it in the currently selected Stream.

6.2.2. Capture (Water Phase) in a Touch-Screen

Make yourself familiar with the operation of the Touch-Screen at section 5. Please follow this procedure to perform an automatic Salinity calibration:

a) Make sure the "Stream" (memory) that you normally use for the current well is selected.
b) Prepare to take a sample.
c) Ask helper find the "Auto-calibrate (Water Phase)" screen by browsing through the menu. If the process fluid is NOT in the Water Phase, the message "Wrong Emulsion Phase" will be displayed. The automatic adjustment of Salinity can only be done when the fluids are in the Water Phase.
d) Wait for a steady reading on the analyzer.
e) Ask your helper to initiate a data capture by actuating the "Capture" button and at the same time take a sample.
f) After the sample is taken ask your helper to stop the data capture actuating the "STOP" button. Make sure the data capture was at least 10 seconds long. The analyzer can be brought back to the main screen. The data capture is stored in the selected "Stream" number. At the bottom of the display the time and date of the capture will be shown.
g) Take the sample to the laboratory.
h) When the result is obtained, make sure the Stream selected in the analyzer is the one that was used when the sample was taken. Remember that the data that was captured was saved on that particular Stream memory. If the analyzer is currently testing a well in a different stream, is better that you wait until the current test is finished before changing the stream number. It doesn't matter if the process fluid is still in the Water Phase to enter the lab result.
i) Browse through the menu and find the Auto-Calibrate (Water Phase) screen. Make sure the time stamp at the bottom matches the time and date your sample was taken. Enter here the laboratory result.
j) The analyzer will calculate the Salinity that was necessary to read the Water Cut that was obtained by the laboratory the day and time the sample was taken and it will save it in the currently selected Stream.

6.2.3. Heuristic Salinity© (Optional)

The Heuristic Salinity is a routine based on statistical calculations that finds the proper salinity in special cases. This routine is Stream Dependent. This means that it can be enabled only on the Streams where it is necessary. Using Heuristic Routine doesn't require the operator to enter the salinity of the process water.

7. Flow Computer

The Phase Dynamics analyzer is a full Flow Computer. If a flow meter is connected to the analyzer, the processor will calculate and display Gross Oil and Water Flow Rates and Totals. If the densities of the production water and the dry oil are entered, the analyzer will also calculate and display the Net Oil and Water flow rates and totals. The water cut is calculated by the processor by reading the frequency from the oscillator and converting this information to water cut by applying the calibration equations. The other variables needed, have to be supplied by the user. They can be entered in different ways.

FC Flow Rate: Analog Input, Pulse input and MODBUS®,

Oil Density @ SC (Standard Conditions), Water Density @ SC, Oil Density @PC (Process conditions) and Water Density @ PC: Analog Input, MODBUS® or Manually

FC Temperature: By default, the analyzer temperature read from the RTD is used. If needed, an external signal can be entered via Analog Input or MODBUS®.

Data		Results
Water Cut @ PC		Gross Oil Flow Rate
FC Flow Rate		Gross Water Flow Rate
FC Temperature		Gross Total
Oil Dens. @ SC	Flow Computer	Net Oil Flow Rate
Oil Dens. @ PC		Net Water Flow Rate
Water Dens. @ SC		Net Total
Water Density @ PC		Corrected WC

See the Section 4.39 for configuration of the Flow Computer on a 4 lines LCD display.

See the section 5.5.2.1 for the configuration of the Flow Computer on a Touch Screen Display

The Gross and Net totals are calculated according to the following equations:

$$Gross\ Oil\ Total\ = \int_0^t Gross\ Oil\ Flow\ Rate\ \times dt$$

$$Gross\ Water\ Total\ = \int_0^t Gross\ Water\ Flow\ Rate\ \times dt$$

$$Net\ Oil\ Flow\ Rate\ = \frac{Gross\ Oil\ Flow\ rate\ \times Density\ of\ Oil\ at\ Process\ Temperature}{Density\ of\ Oil\ at\ Standard\ Temperature}$$

$$Net\ Water\ Flow\ Rate\ = \frac{Gross\ Water\ Flow\ rate\ \times Density\ of\ Water\ at\ Process\ Temperature}{Density\ of\ Water\ at\ Standard\ Temperature}$$

$$Net\ Oil\ Total\ = \frac{Gross\ Oil\ Total\ \times Density\ of\ Oil\ at\ Process\ Temperature}{Density\ of\ Oil\ at\ Standard\ Temperature}$$

$$Net\ Water\ Total\ = \frac{Gross\ Water\ Total\ \times Density\ of\ Water\ at\ Process\ Temperature}{Density\ of\ Water\ at\ Standard\ Temperature}$$

8. Density Correction

The dielectric constant of the oil increases when density of the oil increases. This change causes an error on the water content measurement because this increase in dielectric constant is seen by the analyzer as water. The shift is 0.16 water per each API degree or 0.0286 per each Kg/m3. Phase Dynamics' analyzers are calibrated with oil with a density of 32 API. If a dry crude oil with a density of 31API (1API heavier) flows through our analyzer, the electronics will calculate a water cut of 0.16% which is incorrect because of the increased density. The Enhanced/Expanded electronics includes a Density Correction Software that automatically corrects the water cut deviations due to density if an online density signal is fed to the analyzer.

The density used internally for the correction is the *corrected density at standard temperature and pressure*. The user can feed either the density corrected at standard conditions or the density at process conditions. The analyzer has the capability to convert from one to the other. The software will do the corrections based on the units selected by the user. For this reason, extreme caution should be observed when inputs for the unit and limits from the densitometer are set in the analyzer. If the unit is for example Kg/m3, the Phase Dynamics analyzer will convert this density to Kg/m3 @15°C to do the density correction internally.

The density used for the correction is the density of the dry oil. Since an online densitometer is used, the asumption that the density is the one of the dry oil can only be kept when the water cut is below 5%. After that the density of the water introduces an error that is too big to keep using it. For this reason, the analyzer will use the online density only while the water cut is below 5%. Over that value, the last valid read density will be used until the water cut falls below 5% again. If the analyzer has the density correction enabled but it has never seen a water cut value below 5%, no density correction is performed because there is no valid density saved yet.

The density can be fed in different ways:

Option A: Feeding a 4-20mA signal to one of the analog inputs,

Option B: Connecting a Micro Motion® Coriolis meter to one of the available RS485 communication port and letting the software poll the information from the meter itself. (On units with optional color touch-screen, the communication port number 2 is NOT available),

Option C: Writing the proper registers through the one of the available communication ports using the MODBUS® protocol. (On units with optional color touch-screen, the communication port number 2 is NOT available).

The equations used for the density correction are:

$$\text{Corrected Water cut} = \text{WC} + \text{Adjust (Oil Phase)} + \text{Density Correction}$$

$$X = (\text{Density} - \text{Calibration Density} + \text{FC1 Density}$$

$$\text{Density Correction} = D3 * X^3 + D2 * X^2 + D1 * X + D0$$

Where:

- WC is the uncorrected water cut
- Adjust (Oil Phase) is the calibration offset for the oil phase
- Density is the density corrected to 60°F or to 15°C depending on the selected units. If the density provided is not corrected (process conditions) the analyzer corrects it internally.
- Calibration density is a value dependent of the unit selected (see below)
- FC1 Density adjust is an offset that can be used to correct the densitometer reading.
- D3 is the third order coefficient for the density correction equation.
- D2 is the second order coefficient for the density correction equation.
- D1 is the Slope (See below) for the density correction equation.
- D0 is the offset (See below) for the density correction equation.

The analyzer uses two different reference units for density. The equation used depends on the reference units selected by the user. These can be selected on the Flow Computer 1 Submenu. They are:

API 60F or Kg/m3 15C

If the unit selected is API @ 60F, then the coefficients used will be:

Calibration Density = 32
D3= 0
D2= 0
D1 = 0.16
D0 = 0

And the equation will be reduced to:

$$\text{Density correction for API at 60°F} = (\text{Density} - 32) * 0.16$$

If the selected unit is Kg/m3 @ 15C then the coefficients used will be:

Calibration Density = 0
D3= 0
D2= 0
D1 = -0.0286
D0 = 24.6

And the equation will be reduced to:

$$\text{Density correction for Kg/m3 at 15°C} = \text{Density} *(-0.0286) + 24.6$$

The settings of the density correction function are different for the 3 options (A, B or C) and for the two different types of screens available. There are some settings that are general (Sections 4.1 and 4.2) and some that are specific (Sections 4.3, 4.4 and 4.5).

Identify your option and read only the related sections:
Option A (4-20mA) with 4 lines LCD: Read sections 8.1and 8.3
Option A (4-20mA) with Touch-Screen: Read sections 8.2, 8.3and 8.8

Option B (Reading a Micro Motion® flow meter) with 4 lines LCD display: Read sections 8.1, 8.4 and 8.6
Option B (reading a Micro Motion® flow meter) with Touch-Screen: Read sections 8.2, 8.4, 8.7 and 8.8
Option C (Writing Registers) with 4 lines LCD: Read sections 8.1, 8.5 and 8.6.
Option C (Writing Registers) with a Touch-Screen: Read sections 8.2, 8.5, 8.7 and 8.8.

8.1. General Configuration on a 4 lines LCD Display

The user has to specify the way the density will be fed/obtained to perform the correction. Press [MENU] repeatedly to browse through the menu until the display shows the "Density Correction" screen. Press [SELECT] to navigate the options. The options are:

Disable
Coriolis, PDI Temp
Cor-API60F, Alt Temp
Cor-API60F, Cor Temp
Cor-API60F, PDI Temp
Cor-API60F, Alt Temp
Other

For Analog Input (Option A) or to write the registers via MODBUS® (Option C), select the option: **OTHER** and then press [ENTER] to accept.

To read a Micro Motion® Coriolis meter connected to the communication port 1, 3 or 4 (Option B), select the proper option depending on the units configured in the meter and the temperature to be used. The most common selection for Option C is "Coriolis, PDI Temp." In this case the Coriolis Meter units can be set as Kg/m3 or as API at process conditions and the temperature used will be the one read from the temperature sensor included in the Phase Dynamics analyzer. The analyzer will read the unit from the Micro Motion® mass flow meter and correct it to the one selected for display.

After the selection has been done, the next screen will show the "Density Correction Unit". These are the units that will be used as reference and the unit that will be used to display the density at standard conditions. Also by selecting the reference unit, the proper equation and coefficients will be loaded automatically.

There are two options:

API 60F
Kg/m3 15C

After selecting the reference unit, the next screens will show all the default coefficients. They can be modified if necessary. [SELECT] will enter the edition mode and shift the blinking digit. [VALUE] will increase the value of the blinking digit. [ENTER] will accept the edited value. [MENU] will exit without saving the changes.

Third Order Density coefficient D3:
Second Order Density coefficient D2:
Density Slope D1:
Density Adj. Offset D0:
FC1 Density Adjust:

The next step is to configure the Flow Computer. Press [MENU] several times until you reach the screen "Configure FC1". Press [ENTER].

The first screen is "FC1 Enable". Make sure that it is ON.

Then press [MENU] until you reach the screen "FC1 Density Enable". Make sure it is ON.

Then press [MENU] several times again until you reach the screen "FC1 Density Units". Use [SELECT], [VALUE] and [ENTER] to select the desired density unit for visualization. For option A (4-

20mA) and B (Micro Motion®) this unit can be different from the unit used in the densitometer. This is the unit in which the densities will be shown in the screen. For option A (4-20mA) make sure the unit selected during the configuration of the Analog Input ***match the one in the densitometer (See section 8.3.2)***. For option C (Writing MODBUS® registers), this unit is the unit of the value that will be written in the registers.

Then press [MENU] several times again until you find the screen "FC1 Manual Density".

For option A (4-20mA) and B (Reading Micro Motion®) select **"NO"**.
For option C (Writing MODBUS® registers) select **"YES"**

8.2. General Configuration on a Touch-screen

To access the configuration menus, press the blue MENU button (if the touch-screen is accessible) or press [SELECT] otherwise.

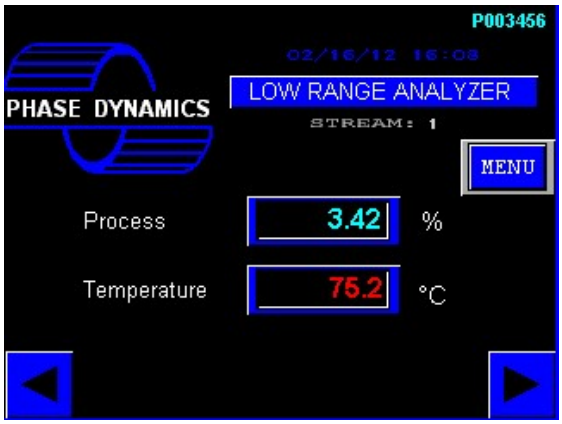

After that keep pressing the arrow (if touch-screen is accessible) or press [MENU] several times until you reach the UTILITIES screen:

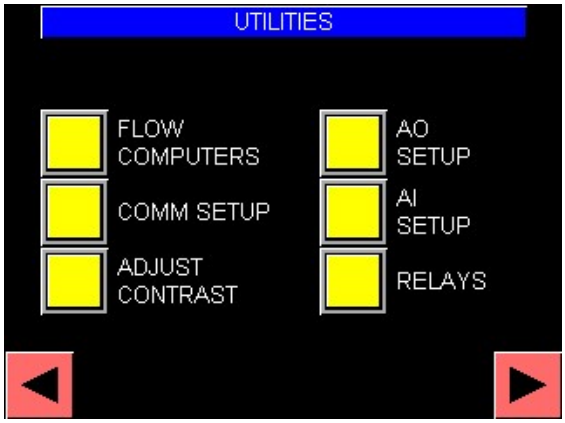

Press the FLOW COMPUTERS yellow button or press [SELECT] and then [ENTER] to access the Flow Computer configuration. Not all the screens are necessary for the density correction configuration. Press [MENU] to skip them until you reach the API TABLE screen:

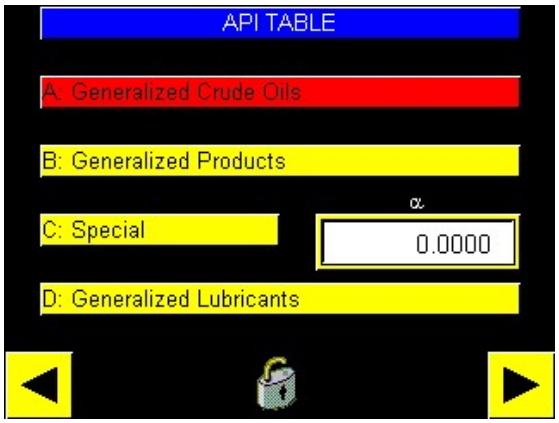

Make sure "A: GENERALIZED CRUDE OILS" is selected. This is the API table that will be used to convert densities from process to standard conditions or vice versa. Then press [MENU] or the arrow on the lower right corner.

Next screen will allow the user to configure the units for the values used or calculated by the Flow Computer. For this application two of them are very important. One is CAL DENSITY which selects the desired reference unit and the unit to show the corrected density. This is explained at the beginning of this chapter. Select your preferred reference unit from Kg/m3 @ 15C or API @ 60F.

The unit at the right of the label "DENSITY" is the unit that will be used to display the density fed to the analyzer. ***This one has to match the density supplied by the densitometer only for Option C (Writing MODBUS® registers)***. For the Option A (Analog input) and B (Micro Motion®) this unit can be different from the one supplied. In Option A the value is converted to the units selected on this screen. For the Micro Motion® the unit is read from the meter itself and then the value is converted to the units selected in this screen. As the analyzer uses the corrected density for the density correction, if the supplied density is NOT corrected (indicated by selecting the proper units) the analyzer will internally correct that density to standard conditions. For this reason the list of units have some units repeated for different standard conditions. For example, "Kg/m3" means process conditions. Kg/m3 15C means that the density corrected at 15 C and atmospheric pressure.

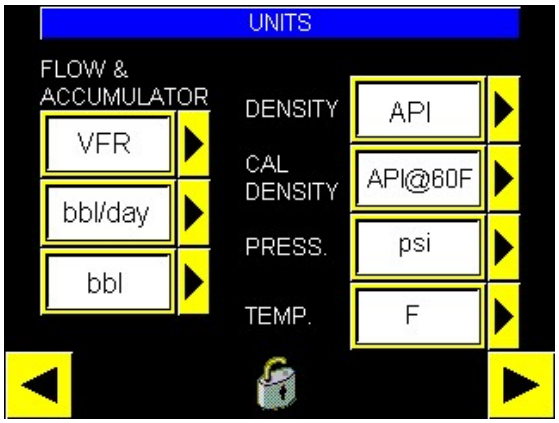

When done press [MENU] or the lower right arrow to go to the DENSITY CORRECTION screen:

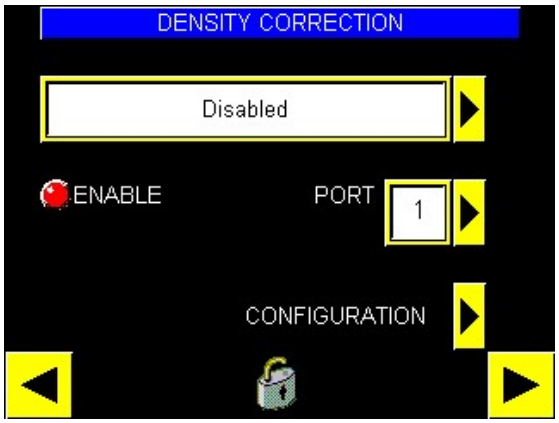

Make sure you select the appropriate option. They are:

Disable
Coriolis, PDI Temp
Cor-API60F, Alt Temp
Cor-API60F, Cor Temp
Cor-API60F, PDI Temp
Cor-API60F, Alt Temp
Other

Select "Other" for the options A (Analog input) and C (writing MODBUS® registers). Select one of the others for the Option B (Reading Micro Motion®). For option B the most common is "Coriolis, PDI Temp" where the Micro Motion® unit has to be configured as Kg/m3 or API (Both in process Conditions). The temperature measured by the Phase Dynamics analyzer will be used for the corrections. Also for option B (reading Micro Motion®) the proper communication port has to be selected. Touch the item you need to change or navigate the screen by using [SELECT], [VALUE] and [Enter]. In the next picture the option "Coriolis & PDI Temp" has been selected. Also the communication port chosen was Com Port 4. For specific instruction to configure the selected port, see section 8.7.

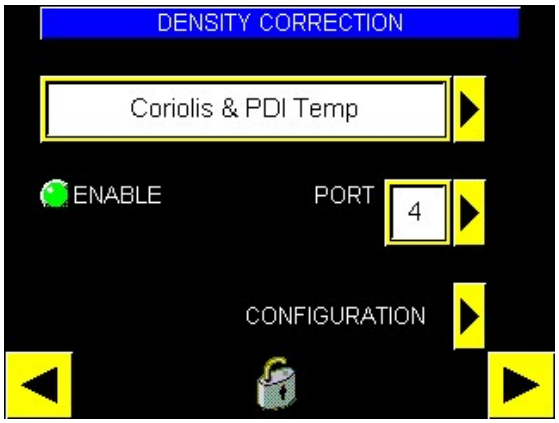

To configure the Micro Motion® Coriolis meter touch the "Configuration" arrow or access it by pressing [SELECT] until the blue arrow points to it and then [ENTER]. The LIQUID FLOW screen will show:

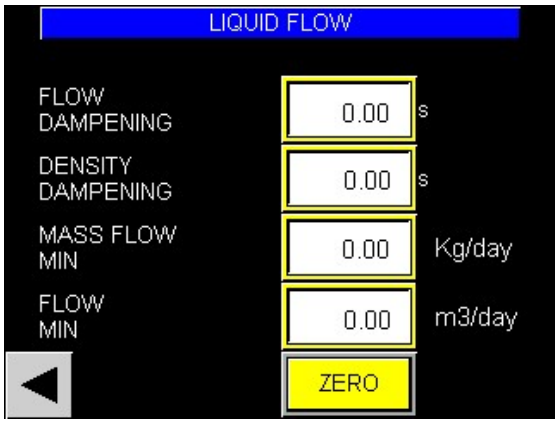

This screen can be used to configure some parameters of the Micro Motion® Coriolis Meter and also to zero it. The procedure to zero the meter is about 50 seconds long (depend on the internal configuration of the meter).

Go back by pressing the arrow on the lower left corner. Then press the arrow on the lower right corner or press [MENU]. The VARIABLE SETUP screen will show.

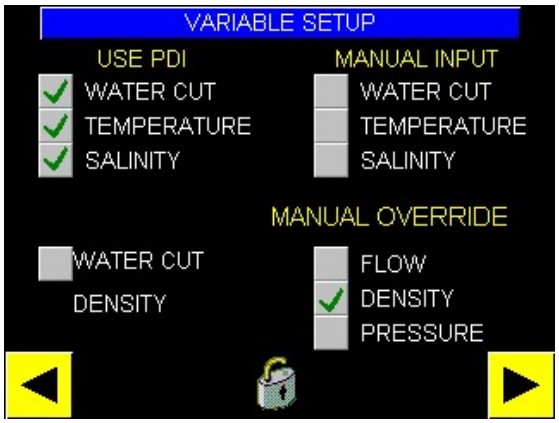

When supplying the density through one analog input (Option A) or reading it via MODBUS® from a Micro Motion® (Option B) leave the checkbox "DENSITY MANUAL OVERRIDE" **UNCHECKED**. For the option where the internal registers are written by MODBUS® (Option C) **CHECK** "DENSITY MANUAL OVERRIDE" the checkbox (as shown in the picture).

Leave all the other settings as they are for density correction.

Press [MENU] one more time to go to the following screen that shows the coefficients. They can be changed if necessary by touching the screen or by using [SELECT], [VALUE] and [ENTER]. The default coefficients are different for the two options in the Calibration Density. This is explained at the beginning of this chapter.

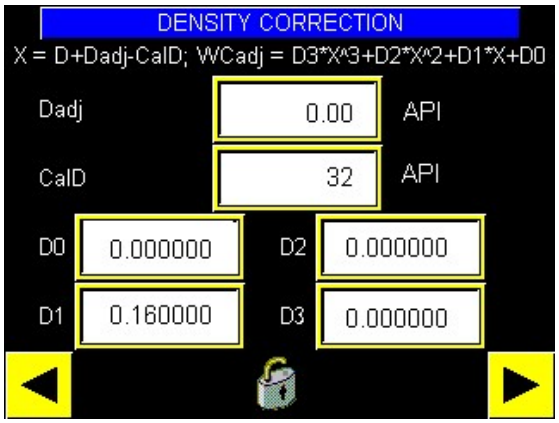

This finishes the Flow Computer configuration. The three options require some extra information detailed in the separated sections that follow.

Remember to save the configurations after doing any change (See section 8.8)

8.3. Specific Configuration for Density Correction using a 4-20 mA Density Signal

8.3.1. Wiring

The analog output of the densitometer has to be connected to the Analog Input 1 of the analyzer in Enhanced Electronics or in any of the 5 Analog Inputs of an Expanded Electronics. See section 2.6.1 for Analog inputs wiring.

8.3.2. Setting the Analog Input on a 4 Lines LCD Display

The first information needed is the Densitometer configuration. For example:

4mA = 800 Kg/m3 at standard conditions
20mA = 1000 Kg/m3 at standard conditions

Open the explosion proof box to access the back of the display board. Set the dip switches on S1 for "Technician Mode" (See section 4). S1-1 ON, S1-2 OFF.

Press [MENU] several times until you reach the screen "Configure AI". If the unit is an Expanded model, more than one Analog Input will be available. Be sure the display shows the Analog Input number where you are going to connect the densitometer. If not, press [VALUE] to choose the desired Analog Input and then press [ENTER].

The next menu will be "AI # Variable"

Press [SELECT] to browse the variables list until you find "***FC1 Density***". Then press [ENTER] to accept it.

The next menu shown will be "AI # Unit"

Press [SELECT] to browse the units list. Press [ENTER] to accept it. As the variable is a density, the analyzer will show a list of density units. The options are:

API	g/cc	Lbs/m3
API60F	g/ml	Ts/yd3
API15C	g/l	Kg/m3
Sg	Kg/l	Kg/m315C
Sg15C	Lbs/gal	Kg/m360F
Sg60F	Lbs/cf	API at 60°F

Attention:
Select exactly the same unit used in the densitometer.

As the analyzer uses the corrected density for the density correction, if the supplied density is NOT corrected (indicated by selecting the proper units in the Analog Input) the analyzer will internally correct that density to standard conditions. For that reason some units are repeated for different standard conditions. For example, "Kg/m3" means process conditions. Kg/m3 15C means that the density supplied by the densitometer is corrected at 15 C and atmospheric pressure.

After this, press [MENU] to access the next screen

AI #x LRV:

This screen will show the current Analog Input "Lower Range Value" LRV. This value is the value that will be assigned to a current input of 4mA. ***It has to match the setting of the densitometer***. Press [MENU] skip this submenu or [SELECT] to enter the edition mode. If the value needs to be changed, press [SELECT] to move the cursor and [VALUE] to change the digits. When finished, press [ENTER] to accept it.

AI #x URV:

This screen will show the current Analog Input "Upper Range Value" URV. This is the value that will be assigned to a current input of 20 mA. ***It has to match the setting in the densitometer***. Press [MENU] to skip this submenu or [SELECT] to enter the edition mode. If the value needs to be changed, press [SELECT] to move the cursor and [VALUE] to change the digits. When finished, press [ENTER] to accept it

AI #x Trim 4 mA:

This trimming is done at the factory so in this case this menu should be skipped.

AI #x Trim 20 mA:

This trimming is done at the factory so in this case this menu should be skipped.

AI #x Dampening (s):

This screen allows the user to set the dampening time in seconds. Press [MENU] to skip this submenu. Press [SELECT] to enter the edition mode. Use [SELECT] to move the cursor and "[VALUE] to change the digits. Then press [ENTER] to accept the new value.

Analog Input #x:

This last screen shows the actual value of the Analog Input selected. Nothing can be changed on this one. This screen will allow the user to confirm that the signal from the densitometer is being received. The reading of the densitometer should match the reading on this screen.

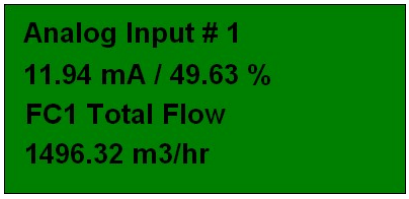

8.3.3. Setting the Analog Input on a Touch-Screen Display

Being on the main screen, press [SELECT] (or press the blue Menu button if the screen is accessible). Then press [MENU] several times (or touch the arrow on the lower right corner) until you reach the "Utilities" screen:

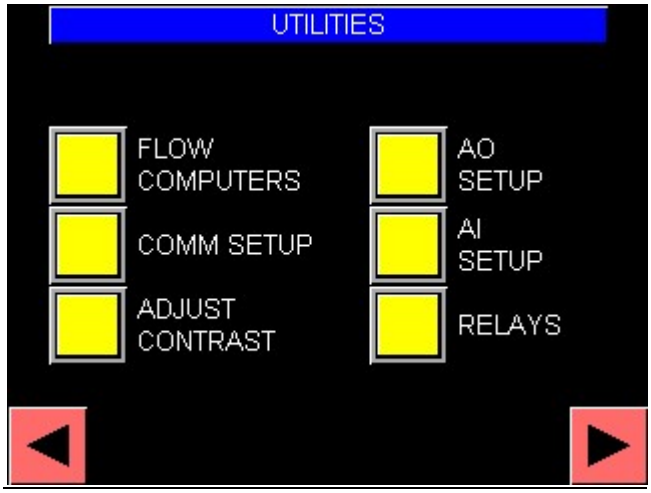

Then press [SELECT] many times until a blue index points to AI SETUP and then press [ENTER] (or touch the AI SETUP button). If the analyzer electronics is Expanded, you will see a screen showing the 5 available analog inputs. Select the one it is going to be connected to the densitometer by pressing [SELECT] and then [ENTER] (Or by touching the button). If it is Enhanced, only one will be shown. Once inside the Analog Input setup the first screen will allow the user to select the variable and the unit. For density correction the variable ***has to be "FC1 Density".***

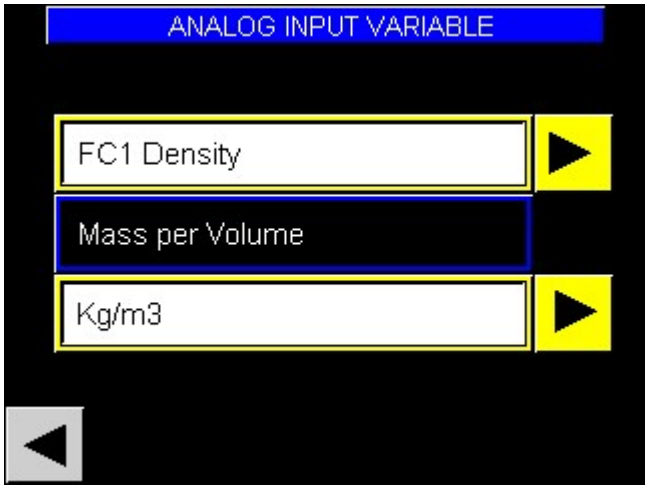

After selecting the variable, the proper units will be shown also. ***You need to select exactly the same unit used in the densitometer***. The analyzer uses the corrected density for the density correction. If the supplied density is NOT corrected (indicated by selecting the proper units on the Analog Input) the analyzer will internally correct that density to standard conditions. That is the reason the list of units

contains both standard and process. For example, “Kg/m3” means process conditions. Kg/m3 15C means that the density supplied by the densitometer is corrected at 15 C and atmospheric pressure.

Press [MENU] or touch the lower right arrow. The next screen lets the user set the Analog Input upper and lower limits. ***These have to match the densitometer settings.***

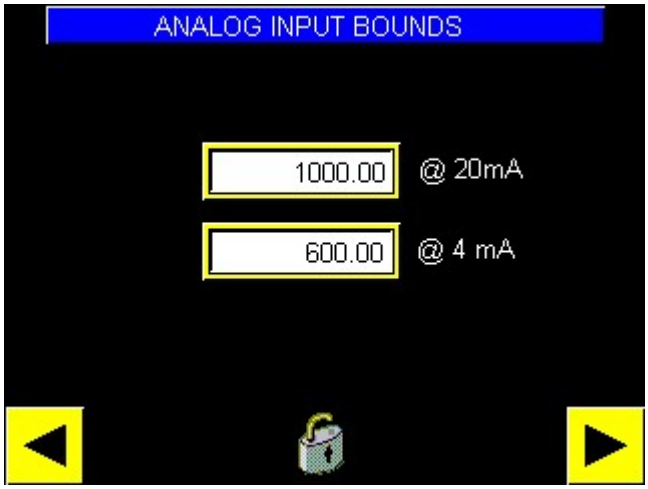

The next screen (not shown here) is used to trim the analog input. As the trimming is done at the factory, skip this menu.

This finishes the setting of the analog input. Remember to save the configuration so the changes are not lost. See section 8.8 for instructions.

8.4. Specific Conf. for Density Correction using a Micro Motion® Coriolis Meter

The general configuration was explained in the sections:

8.1 – General Configuration on a 4 Lines LCD Display

And

8.2 – General Configuration on a Touch-Screen

The remaining task is to configure the communication port and to connect the Micro Motion® mass flow meter. For instructions on how to set the communication ports see Section 4.32 for a 4 lines LCD Display or Section 5.5.2.2 for a Touch-Screen

8.4.1. Wiring

After the communication port has been configured, use the following terminals according to the port set during the configuration to connect the Micro Motion® mass meter. If the Micro Motion® electronics is a core processor, a safety barrier has to be connected between the Micro Motion® and the Phase Dynamics electronics.

Communication Port	Terminal Strip	Terminal Number	Terminal Name	Available with Touch-Screen
1	J11	2	COM1 A	YES
1	J11	3	COM1 B	YES
2	J11	4	COM2 A	NO
2	J11	5	COM2 B	NO
3	J1	1 or 3	COM3 A	YES
3	J1	2 or 4	COM3 B	YES

4	J1	5 or 7	COM4 A	YES
4	J1	6 or 8	COM4 B	YES

And the 24 VDC power for the mass flow meter can be connected at:

Power	Terminal Strip	Terminal Number	Terminal Name	Available in Enhanced
+ 24VDC	J1	35	+24VDC	YES
GROUND	J1	36	24VDC RET	YES

8.4.2. Micro Motion® Meter Configuration

The density units in the Micro Motion® have to be configured according to the option selected on the section 4.1 using Prolink®.

8.5. Specific Configurations for Density Correction via MODBUS® (Option C)

The General Configuration was explained in the sections:

8.1– General Configuration on a 4 Lines LCD Display

And

8.2 – General Configuration on a Touch-Screen

Next is to connect the RS485 signal to the proper port and configure the port parameters. The signal can be connected to any port on analyzers with LCD screen. On analyzers with touch-screen the port 2 is not available.

8.5.1. Wiring

Communication Port	Terminal Strip	Terminal Number	Terminal Name	Available with Touch-Screen
1	J11	2	COM1 A	YES
1	J11	3	COM1 B	YES
2	J11	4	COM2 A	NO
2	J11	5	COM2 B	NO
3	J1	1 or 3	COM3 A	YES
3	J1	2 or 4	COM3 B	YES
4	J1	5 or 7	COM4 A	YES
4	J1	6 or 8	COM4 B	YES

The communication parameters in the selected port have to match the one on the device writing to the analyzer. The default values for comm1 are 9600N1 and for comm2 are 115200N1. Both configurations can be changed from the UTILITIES screen. Please see the communication setup description on section 4.6 for 4 lines LCD and 4.7 for Touch-Screen.

8.5.2. Operation via MODBUS®

After the configuration is done, the density in the proper density unit (The one selected in sections 8.1 or 8.2), has to be written periodically on the floating point register address: 20007. The byte order is ABCD.

8.6. Configuration of the Communication Ports on a LCD Screen

Check what port was selected during the general configuration (Section 8.1).

Being on the main screen, press [MENU] repeatedly until you find the screen "Configure Com1/PDI". Press [SELECT] two or three times depending to the port to configure. The options are:

Configure Com1/PDI
Configure Com2/OIT
Configure Com 3
Configure Com 4

As mentioned before, for option B (reading Micro Motion mass meters) only Com3 and Com4 are available as master ports. Com1 and Com2 are Slaves. After reaching the desired port, press [ENTER] to access the configuration screens and then [MENU] to browse them, [SELECT] to enter in the edition mode and to move the cursor, [VALUE] to change the digits/options and [ENTER] every time a value has to be accepted.
The submenus with their defaults values are:

Cx Slave ID: 1
Cx Baud Rate: 9600
Cx Prefix (Ct): 1.5
Cx Suffix (Ct): 0
Cx Replay Delay (Ct): EOT 10
Cx Watchdog (Ct): 50
Cx Parity : NONE
Cx Retry Time (s): 0.4
Cx Statistics (Screen 1)
Cx Statistics (Screen 2)

Make sure to configure them to match the Micro Motion® settings for Option B and to match the settings of the device writing the MODBUS® registers for Option C.

8.7. Configuration of the Communication Ports on a Touch-Screen

Check what port was selected during the general configuration (Section 8.2). Then being in the main screen, touch the blue Menu button or press [SELECT]. Then touch the lower right arrow or press [MENU] repeatedly until you find the following screen:

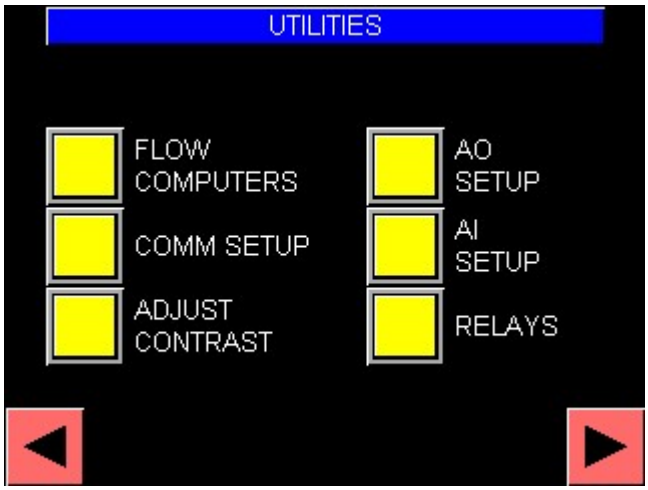

Touch the button “COMM SETUP” or press [SELECT] until a blue arrow points to it and then press [ENTER]. The first screens are statistics screens that show what is happening in the 4 communication ports. Press [MENU] several times to navigate though them or touch the lower right arrow. The following is the screen for port 3 shown as an example.

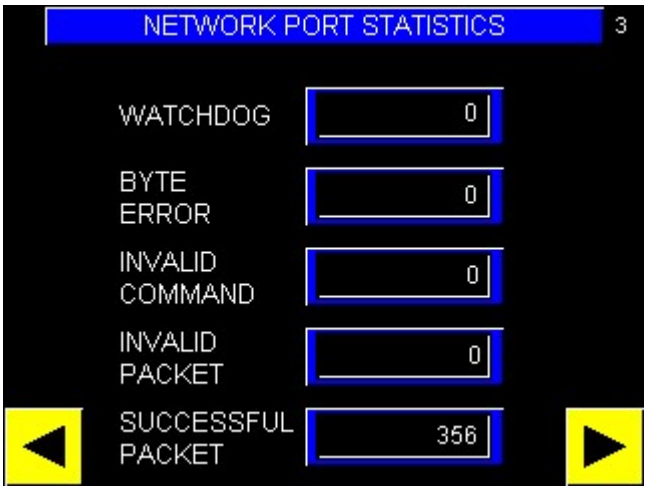

Keep browsing through the screens by pressing [MENU] or touching the lower right arrow. Find the screens to configure the ports 3 or 4 for Option B (Reading a Micro Motion®) or for port 1 for Option C (writing registers via MODBUS®). The port 2 is not available because is being used by the touch-screen. The following is the configuration screen for port 3.

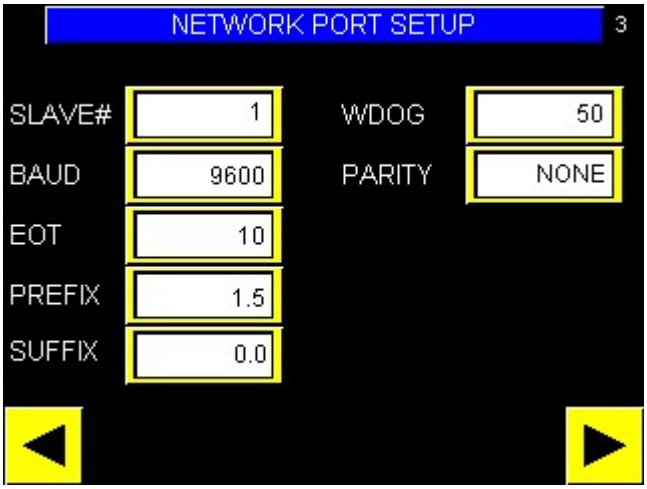

Look for the screen to configure the port that is going to be used and change the parameters so ***they match the communication settings in the Micro Motion® for option B or the settings on the device writing the MODBUS® registers for option C.***

After the port is configured, keep touching the lower right arrow until you get out of the Communication Setup screens and go back to the Utilities screen. Once there, touch the lower right arrow several times to get to the screen that allows the user to save the configuration. Save the configuration by touching the floppy disk symbol and following instructions (See section 8.8) so it is not lost when the analyzer is power cycled. ***After that power cycle the analyzer***. This needs to be done so the port is initialized with the new parameters.

8.8. Saving Configurations

This procedure is only used in the touch-screen version. The LCD display version saves the configuration every time the [ENTER] button is pressed. See section 5.5.2.7 to learn how to save configurations.

9. Instrument Repair and Service

9.1. Assistance and Factory address

Product maintenance agreements and other customer assistance agreements are available for this Phase Dynamics analyzer.

Phase Dynamics, Inc.
1251 Columbia Drive
Richardson, TX 75081
Voice: 972-680-1550
Fax: 972-680-3262
Email: techsupport@phasedynamics.com

All of the printed circuit board assemblies contain electronic components, which are sensitive to electrostatic discharge. Components damaged by ESD greatly increase the likelihood of a system error or failure.

Care should be taken to prevent damage from electrostatic discharge when working with the system. The technician should be wearing a ground strap. Boards removed from the system should be kept in anti static bags.

CAUTION:
Protect circuit boards and terminals from ESD at all times.

9.2. Preventive Maintenance

The Phase Dynamics Analyzer has no moving parts so it requires little or no maintenance. In areas with aggressive environments such as offshore platforms located in tropical areas with high humidity, it is recommended to unscrew the housing that covers the oscillator, the glass window and all the bolts on the explosion proof box and replace the anti-size grease for all the threads every 6 month. Also the O-ring on the glass window should be lubricated with vacuum silicone grease over the same period of time. Make sure the screen is visible. Clean the glass window and verify the operation of all the push buttons in the front panel.

9.3. Repair

9.3.1. Measurement Section and Analyzer

No field repair of the measurement section, oscillator, analyzer, or temperature probe should be necessary. If repair of these parts is needed, please consult Phase Dynamics.

9.3.2. Returning Items to the Factory

Please telephone or email Phase Dynamics prior to returning any equipment for service or repair. A return merchandise authorization (RMA) number may be required prior to shipment. Please include the following information with returned items:

1. Company name, address, telephone number.
2. Key contact name, address, telephone number, fax number, email address.
3. Serial number of item(s) being returned.
4. A completed copy of the Troubleshooting Worksheet (see section 9.4).
5. Return merchandise authorization (RMA) number (if required).

9.3.3. Returning the Analyzer and the Measurement Section

Please drain and clean the measurement section of any and all dangerous or hazardous materials before returning it to the factory.

Pack the analyzer and measurement section in the original shipping carton. If the original carton is missing, contact Phase Dynamics.

Place a packing slip on the outside of the carton containing both the return authorization and the serial number.

9.4. Troubleshooting Worksheet

The next few pages contain the Troubleshooting Worksheets. Please complete the form prior to contacting Technical Support.

PHASE DYNAMICS INC
1251 COLUMBIA DR.
RICHARDSON, TX 75081
PHONE: 972 680 1550
FAX: 972 680 3262
EMAIL: thechsupport@phasedynamics.com

TROUBLESHOOTING WORKSHEET

RMA NUMBER	
PDI CONTACT	
OSCILLATOR SERIAL NUMBER	
MEASUREMENT SERIAL NUMBER	

Company and Contact Information			
DATE		PHONE	
COMPANY		FAX	
CONTACT PERSON		EMAIL	
ADDRESS			
ADDRESS			

For 4 lines LCD display set the analyzer in technician mode (See section 4)

Process and Analyzer Data	
Actual Process Value (Water Cut)	%
Process Temperature	□°C - □ °F
Analyzer Reading (Indicated Water Cut)	%
Analyzer Phase	
Analyzer Oil Frequency	MHZ
Analyzer Oil RP	V
Analyzer Water Frequency	MHZ
Analyzer Water RP	V
Density (Please indicate density units)	V
Typical Flow Rate (Please indicate Flow rate units)	
Oil P1	V/MHZ
Oil P0	V
Oil Frequency High	MHZ
Oil Frequency Low	MHZ
Water Frequency High	MHZ
Water Frequency Low	MHZ
Adjust (Oil Phase)	%
Adjust (Water Phase)	%
Oil Index	MHZ
Water Index	MHZ
Diagnostics	
Error Code/Msg	

POWER STATUS and RELAY INDICATORS
Connect power to the Analyzer.
Indicate the status of the Power Indicator and Relay LEDs. (Place a check-mark in the box if ON and well-lit.)
□ 3.3V □ 5V □ 15V Osc □ 24V HTR □ Relay 1 □ Relay 2

Motherboard Terminals – Measure with Voltmeter

Signal Name	Terminal Strip	Probe		Measured Voltage	Expected Voltage Range
		+	-		
5Volts Power	3	1	2		+4.8 to +5.2VDC
15 Volt Power	11	28	29		+14.7 to 15.3VDC
Heater Power	11	26	27		+22.0 to +28.0VDC
Ground Sense	11	26	29		0.00 to +0.40VDC
V Incident	11	24	29		+0.20 to +4.95 VDC
V Reflected	11	23	29		+0.20 to +4.95 VDC
Oscillator Select	11	15	29		0.00 to +12.5VDC
VTUNE	11	14	29		0.00 to +12.5VDC
EXTUNE	11	13	29		0.00 to 15VDC

For 24 VDC Units Only

Signal Name	Terminal Strip	Probe		Measure Voltage	Expected Voltage Range
		+	-		
24VDC Line to 24VDC Return	N/A	24 VDC LINE	24VDC RETURN		-28 to + 28 VDC
24VDC Return to Earth Ground	N/A	24VDC RETURN	EARTH GROUND		-28 to + 28 VDC
24VDC Return to Chassis	N/A	24VDC RETURN	Chassis		-28 to + 28 VDC

For 90 to 240 VAC Units Only

Signal Name	Terminal Strip	Probe		Measure Voltage	Expected Voltage Range
		+	-		
L to N	N/A	L	N		100 to 240VAC
N to Earth Ground	N/A	N	⏚		0 to 2VAC
N to Chassis	N/A	N	CHASSIS		0 to 2VAC

RTD Test
Only in the case the temperature indication is wrong, please perform the following test:
Disconnect power and remove the Analyzer Board. Measure the RTD wires (P+,P1,P2,P3) from the analyzer with an ohmmeter.
1. Measure P+(Term # 19) to P1 (Term 20). Is it 0Ω? □ YES □ NO _____ Ω
2. Measure P2 (Term # 21) to P3 (Term # 22). Is it 0Ω? □ YES □ NO _____ Ω
3. Measure P+ (Term # 19) to P3 (Term # 22). Is it 100-200Ω? □ YES □ NO _____ Ω
Connect a milliamp meter in series with the White/Brown wire (P+).

Install the Analyzer Board and reconnect power.
Measure the RTD current. Is it 0.200mA? □ YES □ NO _____ mA

If your meter cannot read less than 1mA, disconnect the 4 RTD wires and place a 1000Ω resistor across P+ and P3 and measure the voltage across the resistor.
Is it 0.20V? □ YES □ NO _____ V
Disconnect the power and reconnect the RTD.

DESCRIPTION OF THE PROBLEM:

NOTES:

9.5. Troubleshooting Guide

The following is a list of common problems, their probable cause and the solution

- Problem: Frequencies and reflected powers are zero:
- Possible cause: The oscillator is not receiving power.
- Solution: Measure the voltage between terminals 26 (HTR) and 27 (HTR RET) on the terminal strip J11. These terminals feed a heater that is inside the oscillator which function is to keep a constant temperature. This voltage should be 24VDC +/- 20%. If no voltage is measured, check the fuse F5 (2A) in the power supply board. If everything is correct with the heater power measure the voltage between terminals 28 (+15VDC) and 29 (GND) on the terminal strip J11. These terminals feed the oscillator itself. The voltage should be 15 VDC +/- 10%. If no voltage is measured, check the fuse F1 (0.5A) located on the power supply board and replace it if open. If both voltages are present and the frequencies and reflected powers reading are still zero replace the system cable. If readings are still zero, the oscillator has to be sent back to factory for repair.

- Problem: Analog Output doesn't work
- Possible cause: Bad fuse, Bad wiring or bad board.
- Solution: The analog output/s are ACTIVE and NON ISOLATED. No external power is needed to generate the 4-20mA signal. Remove any wires on the analog output terminals. Connect a milliamp meter between the 2 output terminals. If there is no current at all, check the corresponding fuses on the Analyzer Board for Analog Output 1 and in the Input Output board for the Analog Output 2 to 5. See section 2.6.1 for terminals and fuses identification. If all the fuses are fine the corresponding board has to be replaced. If there is current present at the output, connect the wires going to the control room back to the terminals but also connect the milliamp meter in series with the positive wire. If there is no current, the loop is open somewhere. If the current is an unexpected value, the analog input might be active and it is supplying power to the analyzer. This might destroy the analog output. Disconnect the wires immediately and find a PASSIVE analog input to use with this ACTIVE output. The analog output/s value can be forced by setting the corresponding mode to "MANUAL". This is very useful while checking the communication with the control room. See section 5.5.2.5.6 to learn how to force the analog output/s

- Problem: Question Marks on the Water Content Reading
- Possible Cause: The analyzer is not able to calculate a valid water content or is experiencing a "Phase Error"
- Solution: If the analyzer has been power cycled and there are not frequency readings, it won't be able to calculate a valid water content and the screen will show question marks in the process text box. Please refer to the "Frequencies and reflected powers are zero" problem solution if the frequencies and reflected power readings are zero. If the "Phase Error" message is shown on the screen, then the analyzer is unable to detect the phase of the fluid (Please see section 3.3)

- Problem: Analyzer shows a Phase Error
- Possible Cause: There are 3 possible causes for this.
    - The analyzer is selecting the Water Phase when it should be in the Oil Phase
        - Solution: Check that Oil Reflected Power > P0 + P1 * Oil frequency. If it is not, slowly decrease P0 until the condition is fulfilled. A few seconds later the analyzer will switch to the oil phase and the Phase Error will disappear. If the measured water cut is correct the problem is solved.
    - The analyzer is in water phase but the salinity of the production water is out of the Salinity Range in which the analyzer was calibrated.

        - Solution: Contact Phase Dynamics. The analyzer has to be sent back to the factory to recalibrate the unit to the proper salinity range.
    - Broken analyzer.
        - Solution: If the problem is not related to any of the previous cases, fill the trouble shooting sheet in section 9.4 and contact Phase Dynamics.

- Problem: Readings are erratic or don't match the samples
- Possible cause: Bad installation and/or low flow speed
- Solution: Check the prefer installations on section 2.2. Make sure your installation is not a water or a gas trap. Make sure the flow speed is higher than 2 feet per second.

The following are problems related only with the optional touch screen.

- Problem: Touch Screen not working
- Possible cause: Faulty power supply
- Solution: The touch screen has a power saving feature that put the screen to slip after a certain time (programmable) of inactivity. To wake up the screen up just press [MENU]. If it is still not working measure the voltage between the terminals + and – on the back of the touch screen. This voltage should be 24VDC +/- 10%. If not voltage is present check the Fuse F2 (2A) and replace it if it is open. If there is voltage on the terminals + and – and the screen is still not working the screen is defective and have to be replaced.

- Problem: Touch Screen shows a "Host Communication Error"
- Possible Cause: The communication between the touch screen and the analyzer is lost.
- Solution: Power cycle the unit. If the problem persists check the wiring between the analyzer and the touch screen. If the problem persists, make sure all the fuses in the Power Supply board are fine. If the problem still persists, make sure the analog output and the MODBUS® communication on Com1 are working. If they are not working the problem could be a faulty processor board. If the 2 outputs are active then the problem could be a faulty communication board.

9.6. Error Descriptions

ERROR	*DESCRIPTION*	*ACTION*
Reset Basics	The analyzer has detected an error in the User Configuration and the Factory Configuration. Basic defaults have been loaded for operability. ALL data shall be considered invalid.	Contact Technical Support.
Reset	The unit has been reset, probably due to a power cycle.	If the condition persists, contact Technical Support.
Process out of range	The process value has exceeded its bounds.	1. Complete the Troubleshooting Worksheet. 2. Check Oil Adjust, Water Adjust, and Salinity parameters. 3. Check reflected power (OIL) and compare to the power threshold line OIL P1, P0 to determine if the analyzer has detected the correct emulsion phase. 4. Check frequencies and compare to their boundaries. 5. Contact Technical Support.
Temperature error	The temperature has exceeded its bounds.	Check RTD and RTD assembly.
Frequency error	The frequency has exceeded its bounds.	1. Complete the Troubleshooting Worksheet. 2. Check frequencies and compare to their boundaries. Contact Technical Support.
Variable Unit	An invalid unit code is detected. Data may be invalid.	Contact Technical Support.
Variable Bounds	A variable has exceeded its bounds. Data may be clipped or invalid.	Contact Technical Support.
Timer Failed	A timer has failed to initialize, or its queue is full.	Contact Technical Support.
Execute Failed	An execution event has failed, or its queue is full.	Contact Technical Support.
FLASH Memory	FLASH memory has failed.	Contact Technical Support.
Internal Memory	Internal memory has failed.	Contact Technical Support.
External Memory	External memory has failed.	Contact Technical Support.
Scaling error	Unable to scale primary variable for current output loop.	Check endpoint values.
Current Loop error	The loop current output does not correspond to the primary variable.	1. Check HART address and if current loop is in fixed mode. 2. Check for error conditions that may signal with current loop.
Salinity Calibration Over Range	The calculated salinity is greater than the maximum salinity.	Repeat Salinity Calibration.

ERROR	*DESCRIPTION*	*ACTION*
Salinity Calibration Under Range	The calculated Salinity is less than the minimum salinity.	Repeat Salinity Calibration.
Salinity Calibration not Water Continuous	Fluid stream is oil continuous.	Repeat Salinity Calibration when water continuous.
Salinity Time	Not enough time for adequate salinity sample.	Allow more time for data capture.

9.7. Diagnostic Error Codes

The most recent DIAGNOSTICS ERROR CODE remains until it is cleared.

ERROR	**DESCRIPTION**
0	No error
1	Frequency error
4	User Temperature is out of range
5	Scaling error – cannot scale current output
6	Water Cut over range
8	FLASH failure
9	INTERNAL RAM failure
10	EXTERNAL RAM failure
11	Water Cut under range
15	Current Loop error
16	Reset Basics
19	Water Cut Overrange
20	RP Threshold
21	Salinity Time
22	Salinity Calibration over range
23	Salinity Calibration under range
24	Salinity Calibration not water continuous
25	Temperature under range
26	Temperature over range
28	Phase Logic Error (Not longer used)
34	Oil Calibration not oil continuous
35	Time Reset Error
50	Invalid Watercut (Not longer used)

10. MODBUS® RTU

The Phase Dynamics Analyzer can communicate with MODBUS®-compatible hosts in a multi-drop RS-485 2-wire network. This appendix specifies the mapped addresses for the available data types, the implemented function codes, diagnostics, and other operational characteristics within the Phase Dynamics Analyzer.

Valid Function Codes	*Address (Data) Type*	*Access*	*Description*
01,05,15	Coil	Read/Write	Single ON/OFF, Bit (Boolean)
02	Discrete Input	Read-Only	Single ON/OFF, Bit (Boolean)
03,04,16	Floating-Point & Long Integer	Read-Only &Read/Write	Single Precision IEEE 754 Floating-Point Format or Long Integer Format using two consecutive 16-bit Registers
04	Input Register	Read-Only	Integer Format using a sinble 16-bit Register
03,06,16	Holding register	Read/Write	Integer Format using a single16-bit Register
03,04,06,16	ASCII Characters	Read-Only & Read/Write	Two ASCII Characters packed in a single 16-bit register

Coils, Discrete Inputs, and Registers may use the same address. The Function Code will determine which type of data is to be accessed.

10.1. Floating-Point / Long Integer Format

All floating-point register pairs are in the IEEE 754 Floating-Point Format. The standard byte transmission order is high to low per the following table:

A	B	C	D
SEEE EEEE	EMMM MMMM	MMMM MMMM	MMMM MMMM

Where S: Sign
E: Exponent
M: Mantissa

A different byte transmission order can be requested by adding an offset to the floating-point and long integer register pairs that are to be accessed. The following table describes the offsets and the associated byte transmission orders:

REGISTER OFFSET	BYTE TRANSMISSION ORDER	DESCRIPTION
0	A B C D	IEEE 754 Floating-Point Format Standard
2000	C D A B	IEEE 754 Floating-Point Format Word-swapped
4000	D C B A	IEEE 754 Floating-Point Format Reverse
6000	B A D C	IEEE 754 Floating-Point Format Byte-swapped
8000	A B C D	Scaled Long integer Standard

10.2. Integer / ASCII-Pair Format

All word and ASCII byte-pair registers are transmitted high byte then low byte (AB). Integers are scaled, when appropriate. The scale factor is listed in the table.

10.3. Diagnostics Register Bit Definitions

The analyzer has a 16 bits diagnostics word. Every bit represents a different diagnostic.

Table 1 - DIAGNOSTICS BITS

15	**14**	**13**	**12**	**11**	**10**	**9**	**8**
Reset Basics	Reset	Process Hi	Process Lo	Temp Hi	Temp Lo	Frequency Hi	Frequency Lo

7	**6**	**5**	**4**	**3**	**2**	**1**	**0**
Internal Memory	VAR Unit	VAR Bounds	FLASH Write-Protected	FLASH Memory	Timer Failed	Execute Failed	External Memory

DIAGNOSTICS FLAG	*DESCRIPTION*
Reset Basics	The analyzer has detected an error in the User Configuration and the Factory Configuration. Basic defaults have been loaded for operability. ALL data shall be considered invalid.
Reset	The unit has been reset, probably due to a power cycle.
Process High	The process value has exceeded its upper bound.
Process Low	The process value has exceeded its lower bound.
Temperature High	The temperature has exceeded its upper bound.
Temperature Low	The temperature has exceeded its lower bound.
Frequency High	The frequency has exceeded its upper bound.
Frequency Low	The frequency has exceeded its lower bound.
Internal Memory	Internal memory has failed its check routine.
Variable Unit	An invalid unit code is detected. Data may be invalid.
Variable Bounds	A variable has exceeded its bounds. Data may be clipped or invalid.
FLASH Write-Protected	A write-protect error occurred while attempting to write to FLASH memory.
FLASH Memory	FLASH memory has failed its check routine.
Timer Failed	A timer has failed to initialize, or its queue is full.
Execute Failed	An execution event has failed, or its queue is full.
External Memory	External memory has failed its check routine.

10.4. Diagnostics Error Code

The most recent DIAGNOSTICS ERROR CODE remains until it is cleared.

Table 2 - DIAGNOSTICS ERROR CODES

ERROR	*DESCRIPTION*
0	No error
1	Frequency error
4	User Temperature is out of range
5	Scaling error – cannot scale current output
6	Water Cut over range
8	FLASH failure
9	INTERNAL RAM failure
10	EXTERNAL RAM failure

11	Water Cut under range
15	Current Loop error
16	Reset Basics
21	Salinity Time
22	Salinity Calibration over range
23	Salinity Calibration under range
24	Salinity Calibration not water continuous
25	Temperature under range
26	Temperature over range
34	Oil Calibration not oil continuous

10.5. Saving the User Configuration

Notes:

1. Saving the configuration degrades the FLASH memory.
2. Saving ANY data will cause the ENTIRE configuration to be stored.
3. All auto-saves will save the ENTIRE configuration. There is, however, no Auto-save mode for the Coefficient Table. To save it, either write to an auto-save register, or write to the "*Save Configuration*" coil.
4. Locking and unlocking the device is considered to be an auto-save.

Upon completion of the setup, the user MUST save the configuration. There are three methods available to accomplish this:

1. Since all configuration data is updated in RAM, the unit will perform with the parameters as they are changed (except for the communications setup). However, upon reset, these parameters revert to their saved setting. To save the changes, write to the *"Save Configuration"* coil.
2. Sometimes a user will only need to update a few items. In most cases, the AUTOSAVE mode can be used. Simply add the appropriate offset to the address and your entire configuration will be automatically saved upon writing to that register. Care must be taken as to not use this too frequently because it will degrade the FLASH memory. Reading the offset registers will not cause an automatic save of the configuration.
3. An alternate AUTOSAVE mode is available for use with long integer or floating-point register pairs. The *"Automatic Save on Pair Boundary"* mode causes data to be saved upon write to the upper register boundary. For example, 00011..00012 is the register pair for Salinity. To automatically save this register, simply add 1 to the register address to read/write 00012..00013. This will only cause a boundary shift, and will not affect neighboring registers. If the *"Automatic Save on Pair Boundary"* mode is not set for the port, an address error will occur. Reading the offset registers will not cause an automatic save of the configuration.

Table 3 - AUTOSAVE OFFSETS

TYPE	*OFFSET*
Integer	10000
Floating-Point / Long Integer	10000, 1*
Discrete IO / Coils	10000

*This mode requires setting the *"Automatic Save on Pair Boundary"* coil for the corresponding port.

10.6. Write-Protection

Notes:

1. Upon lock or unlock, the configuration will be automatically saved!

The factory default code is 1234 for version 6.09 and earlier and 1357 for versions 6.11 and later.
To unlock, simply enter the password into register 49990.
The Lock status bit 00050 reflects the current lock status.
To lock, simply write a 1 to the Lock status bit.
To change the password, the unit must be unlocked.
The password is stored in register 49980.
The password cannot be read.
There is a 10-second lockout if a wrong password is detected.

The FACTORY MODE unlock is limited to factory use and is not available to the user.

10.7. Calibration with MODBUS®

The Phase Dynamics Analyzer has two automatic-calibration modes. These modes allow the user to enter the measured water content to automatically adjust the parameters.

Prior to automatic-calibration, the user must take a sample and set the appropriate data-capture coil. This captured data will be used later when the current water content value is entered directly into the Calibrate Oil register or Calibrate Water register depending on the phase being calibrated. If this is not done first, the current measurements will be used instead. The oil calibration affects the value of the "Adjust Oil" factor or the value of the operator entered salinity depending on what calibration is being performed. These values can also be adjusted manually, if desired. It is recommended that the configuration be saved upon completion of a capture.

10.8. MODBUS® Tables

Note: The addresses with a check mark in the "U" column can be saved in the User Configuration. The addresses with a checkmark in the "F" column can be saved in the Factory Configuration. FACTORY MODE unlock is limited to factory use and is not available to the user

Note: In the following table, the numbers shown on the addresses columns are the offsets needed. For example the number 4 in the Process Value register 40006 is part of the offset and it is not the function code. The function code has to be added on the front. The way this is done, depends on the PLC used.

10.8.1. MODBUS® INTEGER TABLE

ADDRESS	SCALE	U	F	DESCRIPTION
40001	1			Serial Number – Measurement Section
40002	1	✓	✓	Diagnostics
40003	1	✓	✓	Extended Diagnostics
40004	1	✓	✓	Diagnostics Error Code
40005	1	✓	✓	Diagnostics Message Code
40006	100			Process Value (Water Content)
40007	10			Process Temperature
40008	10			User Temperature
40009	1			Emulsion Phase
40010	1	✓	✓	Stream Select
40011	100	✓	✓	Salinity
40012	100	✓	✓	Oil Adjust
40013	100	✓	✓	Water Adjust

40014	1	✓	✓	Unit Code – Temperature
40015	1	✓	✓	Mode - Oil Calculation
40016	1	✓	✓	Mode - Density Correction
40017	1	✓	✓	Density Correction Mode MODBUS® Master Port Select
40018	1			Timer Counter
40019	1	*	*	Mode – Demo Analyzer
40020	1		✓	Mode – Analyzer
40021	1			Manufacturer ID
40022	1			HART Command Revision
40023	1			HART Transmitter Revision
40024	1			Firmware Version
40025	1			Hardware Version
40026	1	✓	✓	Number of Samples to Average
40027	1		✓	Oil Phase Calculation Oscillator Select
40028	1		✓	Water Phase Calculation Oscillator Select
40029	1	✓	✓	NaN Value for Integer
40030	1			Power Cycle Counter
40031	1	✓	✓	Mask - Diagnostics
40032	1	✓	✓	Mask - Extended Diagnostics
40091	FS30K			Frequency – Oil Oscillator
40092	FS30K			Incident Power – Oil Oscillator
40093	FS30K			Reflected Power – Oil Oscillator
40094	FS30K			Frequency – Water Oscillator
40095	FS30K			Incident Power – Water Oscillator
40096	FS30K			Reflected Power – Water Oscillator
40097	FS30K			Water Content
40098	FS30K			Temperature
42101	1	✓	✓	[1] Port – Slave Address
42102	0.01	✓	✓	[1] Port – Baud Rate
42103	1	✓	✓	[1] Port – Parity
42104	100	✓	✓	[1] Port – EOT Delay
42105	100	✓	✓	[1] Port – Prefix
42106	100	✓	✓	[1] Port – Suffix
42107	100	✓	✓	[1] Port – Watchdog
42108	1	✓	✓	[1] Port – Number of Bits
42109	1	✓	✓	[1] Port – Stop Bits
42110	1	✓	✓	[1] Port – Number of Retries
42111	1	✓	✓	[1] Port – Poll Time
42112	1	✓	✓	[1] Port – Timeout
42113..42124		✓	✓	[2] Port
42125..42136		✓	✓	[3] Port
42137..42148		✓	✓	[4] Port
42149		✓	✓	HART – Address (EEA)

42150	1	✓	✓	HART – Number of Preambles
44001	1	✓	✓	Capture Oil – Number of Oil Oscillator Samples
44002	1			Capture Oil – Current Sample
44003..44008	1			Capture Oil – Time & Date Stamp
44011	1	✓	✓	Capture Water – Number of Oil Oscillator Samples
44012	1			Capture Water – Current Sample
44013..44018	1			Capture Water – Time & Date Stamp
48001	1	✓	✓	[1] Flow Computer – process unit code
48002	1	✓	✓	[1] Flow Computer – temperature unit code
48003	1	✓	✓	[1] Flow Computer – pressure unit code
48004	1	✓	✓	[1] Flow Computer – density unit code
48005	1	✓	✓	[1] Flow Computer – flow class code
48006	1	✓	✓	[1] Flow Computer – flow unit code
48007	1	✓	✓	[1] Flow Computer – accumulator unit code
48008	1	✓	✓	[1] Flow Computer – oil density unit code
48009	1	✓	✓	[1] Flow Computer – oil density @STP unit code
48010	1	✓	✓	[1] Flow Computer – water density unit code
48011	1	✓	✓	[1] Flow Computer – water density @STP unit code
48012	1	✓	✓	[1] Flow Computer – number of pulses per accumulation unit
48013	1	✓	✓	[1] Flow Computer – API Correction Table
48021..48033	1	✓	✓	[2] Flow Computer unit codes
48041..48053	1	✓	✓	[3] Flow Computer unit codes
48201..48202	1	✓	✓	[1] Analog Input variable class, unit code
48203..48204	1	✓	✓	[2] Analog Input variable class, unit code
48205..48206	1	✓	✓	[3] Analog Input variable class, unit code
48207..48208	1	✓	✓	[4] Analog Input variable class, unit code
48209..48210	1	✓	✓	[5] Analog Input variable class, unit code
48211..48212	1	✓	✓	[1] Analog Output variable class, unit code
48213..48214	1	✓	✓	[2] Analog Output variable class, unit code
48215..48216	1	✓	✓	[3] Analog Output variable class, unit code
48217..48218	1	✓	✓	[4] Analog Output variable class, unit code
48219..48220	1	✓	✓	[5] Analog Output variable class, unit code
48221..48222	1	✓	✓	[6] Analog Output variable class, unit code
48223..48224	1	✓	✓	[7] Analog Output variable class, unit code
48225..48226	1	✓	✓	[8] Analog Output variable class, unit code
48227..48228	1	✓	✓	[9] Analog Output variable class, unit code
48229..48230	1	✓	✓	[1] Relay variable class, unit code
48231..48232	1	✓	✓	[2] Relay variable class, unit code
45001..45002	1	✓	✓	HART – Date
45003..45019	1	✓	✓	HART – Long Tag

45020..45024	1	✓	✓	HART – Short Tag
45025..45033	1	✓	✓	HART – Description
45034..45050	1	✓	✓	HART – Message
45053..45054	1		✓	Calibration Version
45055..45057	1		✓	Calibration Technician
45058..42078	1		✓	Copyright
45079..45089	1		✓	Analyzer Information
45090..45095	1		✓	Assembly Date
49000	1	✓	✓	Scratchpad Mirror of 49001
49001..49050	1	✓	✓	Scratchpad
49101..49120	1	✓	✓	User-Select Register Configuration
49980	1	✓	✓	Password Change
49990	1	*	*	Unlock (enter password here)

10.8.2. MODBUS® FLOATING-POINT / LONG INTEGER TABLE

ADDRESS (ABSOLUTE)	SCALE (LONG INT)	U	F	DESCRIPTION
00001	1			Serial Number – Measurement Section
00003	1	✓	✓	Diagnostics
00005	1	✓	✓	Extended Diagnostics
00007	1	✓	✓	Diagnostics Error Code
00009	1	✓	✓	Diagnostics Message Code
00011	1000			Process Value (Water Content)
00013	10			Process Temperature
00015	10			User Temperature
00017	1			Emulsion Phase
00019	1	✓	✓	Stream Select
00021	100	✓	✓	Salinity
00023	100	✓	✓	Oil Adjust
00025	100	✓	✓	Water Adjust
00027	1	✓	✓	Unit Code – Temperature
00029	1000			Unadjusted, Unclipped Water Content Value
00031	1000	✓	✓	Oil Index
00033	1000	✓	✓	Water Index
00035	10000	✓	✓	Oil P0
00037	10000	✓	✓	Oil P1
00039	100	✓	✓	Calibrate Oil Phase
00041	100	✓	✓	Calibrate Water Phase
00101	1000			Frequency – Oil Oscillator
00103	1000			Incident Power – Oil Oscillator
00105	1000			Reflected Power – Oil Oscillator
00107	1000			IP/RP – Oil Oscillator
00109	1000			IP/RP (dB) – Oil Oscillator
00111	1000			Frequency – Water Oscillator
00113	1000			Incident Power – Water Oscillator
00115	1000			Reflected Power – Water Oscillator
00117	1000			IP/RP – Water Oscillator
00119	1000			IP/RP (dB) – Water Oscillator
00201	1000	✓	✓	Oil Calculation Cutoff Value
00203	1000	✓	✓	Oil Calculation Curve 1 Maximum Value
00205	1000	✓	✓	Oil Calculation Curve 2 Maximum Value
00701	1000	✓	✓	Dampening Value – Water Content
00703	1000		✓	Minimum – Water Content

ADDRESS (ABSOLUTE)	SCALE (LONG INT)	U	F	DESCRIPTION
00705	1000		✓	Maximum – Water Content
00707	1000	✓	✓	Alarm Low – Water Content
00709	1000	✓	✓	Alarm High – Water Content
00711	1000	✓	✓	Dampening Value – Process Temperature
00713	10		✓	Minimum – Process Temperature
00715	10		✓	Maximum – Process Temperature
00717	10	✓	✓	Alarm Low – Process Temperature
00719	10	✓	✓	Alarm High – Process Temperature
00721	10	✓	✓	User Temperature Adjust
00723	100		✓	Minimum – Salinity
00725	100		✓	Maximum – Salinity
00727	1000	✓	✓	Minimum – Oil Frequency
00729	1000	✓	✓	Maximum – Oil Frequency
00731	1000	✓	✓	Low Oil Frequency
00733	1000	✓	✓	High Oil Frequency
00735	1000	✓	✓	Minimum – Water Frequency
00737	1000	✓	✓	Maximum – Water Frequency
00739	1000	✓	✓	Low Water Frequency
00741	1000	✓	✓	High Water Frequency
00801	10000			Oscillator Select Voltage
00803	10000			VTUNE Output Voltage
00805	10000			TUNE Select Voltage
00807	10000			Reflected Power
00809	10000			Incident Power
00811	10000			Process Temperature
00813	10000			Electronics Temperature
00815	10000			Ground Sense Voltage
00817	10000			VTUNE Input Voltage
00819	10000	✓	✓	[1] DAC output voltage for Analog Output
00821	10000	✓	✓	[2] DAC output voltage for Analog Output
00823	10000	✓	✓	[3] DAC output voltage for Analog Output
00825	10000	✓	✓	[4] DAC output voltage for Analog Output
00827	10000	✓	✓	[5] DAC output voltage for Analog Output
00829	10000	✓	✓	[6] DAC output voltage for Analog Output
00831	10000	✓	✓	[7] DAC output voltage for Analog Output

ADDRESS (ABSOLUTE)	SCALE (LONG INT)	U	F	DESCRIPTION
00833	10000	✓	✓	[8] DAC output voltage for Analog Output
00835	10000	✓	✓	[9] DAC output voltage for Analog Output
00841	10000	✓	✓	[1] ADC input voltage for Analog Input
00843	10000	✓	✓	[2] ADC input voltage for Analog Input
00845	10000	✓	✓	[3] ADC input voltage for Analog Input
00847	10000	✓	✓	[4] ADC input voltage for Analog Input
00849	10000	✓	✓	[5] ADC input voltage for Analog Input
00871	1	✓	✓	[1] Relay – Mode
00873	1	✓	✓	[1] Relay – Status Mask
00875	1	✓	✓	[1] Relay – Variable Select
00877	1	✓	✓	[1] Relay – Set point Value
00881	1	✓	✓	[2] Relay – Mode
00883	1	✓	✓	[2] Relay – Status Mask
00885	1	✓	✓	[2] Relay – Variable Select
00887	1	✓	✓	[2] Relay – Set point Value
00889	1000	✓	✓	Density – Correction Factor for Temperature
00891	10000	✓	✓	Density – Correction Factor for Density
00893	10000	✓	✓	Density – Correction Factor Offset
00895	100	✓	✓	Density – Water Content Correction Factor
00897	100	✓	✓	Density – Water Content Correction Offset
00899	100	✓	✓	Density – Factory Calibration Density in API60F
01001	100	✓	✓	[1] Analog Input – Current
01003	100			[1] Analog Input – Current Percent of Range
01005	1	✓	✓	[1] Analog Input – Value
01007	1	✓	✓	[1] Analog Input – Variable Select
01009	1000	✓	✓	[1] Analog Input – Current Dampening Value
01011	1	✓	✓	[1] Analog Input – Minimum Trim Value
01013	1	✓	✓	[1] Analog Input – Maximum Trim Value
01015	1000	✓	✓	[1] Analog Input – Minimum Trim Value Current
01017	1000	✓	✓	[1] Analog Input – Maximum Trim Value Current
01019	10000	✓	✓	[1] Analog Input – Lower Range Value
01021	10000	✓	✓	[1] Analog Input – Upper Range Value
01031..01052				[2] Analog Input
01061..01082				[3] Analog Input
01091..01112				[4] Analog Input
01121..01142				[5] Analog Input

ADDRESS (ABSOLUTE)	SCALE (LONG INT)	U	F	DESCRIPTION
01201	100	✓	✓	[1] Analog Output – Current
01203	100			[1] Analog Output – Current Percent of Range
01205	1	✓	✓	[1] Analog Output – Variable Select
01207	1000	✓	✓	[1] Analog Output – Current Dampening Value
01209	1000	✓	✓	[1] Analog Output – Proportional Constant
01211	1000	✓	✓	[1] Analog Output – Integral Constant
01213	1000	✓	✓	[1] Analog Output – Derivative Constant
01215	1000	✓	✓	[1] Analog Output – Manual Percent Input
01217	1000	✓	✓	[1] Analog Output – PID Set point
01219	1	✓	✓	[1] Analog Output – Minimum Trim Value
01221	1	✓	✓	[1] Analog Output – Maximum Trim Value
01223	1000	✓	✓	[1] Analog Output – Minimum Trim Value Current
01225	1000	✓	✓	[1] Analog Output – Maximum Trim Value Current
01227	10000	✓	✓	[1] Analog Output – Lower Range Value
01229	10000	✓	✓	[1] Analog Output – Upper Range Value
01231..01260				[2] Analog Output
01261..01290				[3] Analog Output
01291..01320				[4] Analog Output
01321..01350				[5] Analog Output
01351..01380				[6] Analog Output
01381..01410				[7] Analog Output
01411..01440				[8] Analog Output
01441..01470				[9] Analog Output
01701	1			[1] Port – Watchdog Counter
01703	1			[1] Port – Error Counter
01705	1			[1] Port – Invalid Command Counter
01707	1			[1] Port – Invalid Packet Counter
01709	1			[1] Port – Success Counter
01711	1			[1] Port – Number of Retries Counter
01713..01724				[2] Port Counters
01725..01736				[3] Port Counters
01737..01748				[4] Port Counters
01749..01758				[5] Port Counters
01759..01768				[7] Port Counters
01769..01778				[8] Port Counters
01851	1			LOG – n
01853	1			LOG – maximum records per sector
01855	1			LOG – current sector

ADDRESS (ABSOLUTE)	SCALE (LONG INT)	U	F	DESCRIPTION
01857	1			LOG – number of possible sectors
01859	1	✓	✓	LOG – Sampling Period
01861	1			LOG – Index
01901..01940	1000	✓	✓	Scratchpad
01951..01965	1			ESN
01967	1		✓	Serial Number – Measurement Section
01969	1		✓	Serial Number – Power Board
01971	1		✓	Serial Number – Processor Board
01973	1		✓	Serial Number – Communications Board
01975	1		✓	Serial Number – Analyzer Board
01977	1		✓	Serial Number – Analog I/O Board
01979	1		✓	Serial Number – Motherboard
01981	1		✓	Serial Number – DC Board
01983	1		✓	Serial Number – Oscillator
01985	1	✓	✓	Final Assembly Number
20001	1000	✓	✓	[1] Flow Computer – Process Value (Water Content)
20003	10	✓	✓	[1] Flow Computer – Process Temperature
20005	1000	✓	✓	[1] Flow Computer – Pressure
20007	1000	✓	✓	[1] Flow Computer – Density
20009	1000			[1] Flow Computer – PDI Corrected Density
20011	100	✓	✓	[1] Flow Computer – Salinity
20013	100000	✓	✓	[1] Flow Computer – Meter Factor
20015	100000	✓	✓	[1] Flow Computer – Shrinkage
20017	1000	✓	✓	[1] Flow Computer – Oil Density
20019	1000	✓	✓	[1] Flow Computer – Oil Density @STP
20021	1000	✓	✓	[1] Flow Computer – Water Density
20023	1000	✓	✓	[1] Flow Computer – Water Density @STP
20025	1000			[1] Flow Computer – VCF Oil
20027	1000			[1] Flow Computer – VCF Water
20029	1000			[1] Flow Computer – Net Water Content
20031	1000	✓	✓	[1] Flow Computer – Total Flow Rate
20033	1000			[1] Flow Computer – Oil Flow Rate
20035	1000			[1] Flow Computer – Water Flow Rate
20037	1000			[1] Flow Computer – Gross Total
20039	1000			[1] Flow Computer – Gross Oil
20041	1000			[1] Flow Computer – Gross Water
20043	1000			[1] Flow Computer – Pulse Counter
20045	1000			[1] Flow Computer – Pulse Flow

ADDRESS (ABSOLUTE)	SCALE (LONG INT)	U	F	DESCRIPTION
20047	1000			[1] Flow Computer – Pulse Total
20049	1000			[1] Flow Computer – Net Flow Total
20051	1000			[1] Flow Computer – Net Flow Oil
20053	1000			[1] Flow Computer – Net Flow Water
20055	1000			[1] Flow Computer – Net Total
20057	1000			[1] Flow Computer – Net Oil
20059	1000			[1] Flow Computer – Net Water
20061	1000	✓	✓	[1] Flow Computer – α
20073	1000			[1] Flow Computer Gross Average Water Cut
20075	1000			[1] Flow Computer Net Average Water Cut
20201..20262				[2] Flow Computer
20401..20462				[3] Flow Computer

10.8.3. MODBUS® DISCRETE IO / COIL TABLE

ADDRESS (ABSOLUTE)	U	F	DESCRIPTION
00001..00016	✓	✓	Diagnostics
00017..00032	✓	✓	Extended Diagnostics
00033	✓	✓	Alarm
00034	✓	✓	Error/ Error Reset
00035		✓	Demo Mode
00036	✓	✓	Data Change Indicator (automatically clears when data is saved)
00037			Real Time Clock is Present
00039			Alarm High – Water Content
00040			Alarm Low – Water Content
00041			Alarm High – Temperature
00042			Alarm Low – Temperature
00043			Alarm High – Electronics Temperature
00044			Alarm Low – Electronics Temperature
00050	✓	✓	Lock & Lock Status
00091			Stop Capture Water Phase
00092			Stop Capture Oil Phase
00101	✓	✓	Select Temperature Units Degree C
00102	✓	✓	Capture Oil Phase Data Record
00103	✓	✓	Capture Water Phase Data Record
00104	✓	✓	Ignore MODBUS® Data Exceptions
00105	✓	✓	Auto save on Pair Boundary in MODBUS®
00106	✓	✓	Force Hart Command Revision 5
00107	✓	✓	Enable Current Loop Output
00111		✓	Force Into Research Analyzer Mode
00113		✓	Disable the Oscillator's Heater
00115	✓	✓	Enable Periodic Built-in Tests
00116	*	*	Perform Full Self-test
00117	*	*	System Reset
00118	✓	✓	Save the User Configuration
00119	✓	✓	Restore the User Configuration
00120	*	*	Restore Factory Defaults
00123	✓	✓	LOG – Enable Periodic Logging
00124	✓	✓	LOG – Enable Erase on Next Cycle
00125	✓	✓	LOG – Enable Configuration Logging
00126	✓	✓	LOG – Enable Error Logging
00127	*	*	System Restart
00141	*	*	Reset Totalizers

10.8.4. MODBUS® COEFFICIENT TABLE (IEEE ABCD)

ADDRESS (ABSOLUTE)	U	F	DESCRIPTION
60001..60002		✓	TEMP OIL MAX
60003..60022		✓	TEMPS OIL
60023..60102		✓	COEFF TEMP OIL
60103..60104		✓	SALT MAX
60105..60144		✓	SALTS
60145..60146		✓	TEMP WATER MAX
60147..60176		✓	TEMPS WATER
60177..62576		✓	COEFF SALT TEMP WATER
62577..62696	✓	✓	Salinity (Stream)
62697..62816	✓	✓	Oil Adjust (Stream)
62817..62936	✓	✓	Water Adjust (Stream)
62937..63056	✓	✓	Water Alarm Low (Stream)
63057..63176	✓	✓	Water Alarm High (Stream)

11. HART®

The Phase Dynamics Analyzer can communicate with HART® compatible hosts in a multi-drop or point-to-point network. This appendix specifies the protocol, setup and configuration settings.

HART® instruments communicate over a half-duplex network at 1200 baud, 8 bits, odd parity, and 1 stop bit. HART® 202 supports older current loops in either a point-to-point or multi-drop network. Phase Dynamics' implementation of HART® is user-selectable to communicate HART® 5 or HART® 6 according to the *Universal Command Specification Revision 5.2 or Revision 6.0* and the *Data Link Layer Specification Revision 8.1*. The transmitter revision is 2.

The three HART® Dynamic Variables are:

VARIABLE	DESCRIPTION	UNIT
PRIMARY	Process (Water Cut)	%
SECONDARY	Temperature	°C
TERTIARY	Emulsion Phase	(None)

A handheld device such as a Rosemount 275 communicator may be connected directly to the terminals HART on the motherboard.

IMPORTANT:

In order to save the configuration, the write-protect (Device Discrete #2) must be turned on after all configuration changes are completed. You may then turn it back off. This process will force the configuration in RAM to be stored to FLASH. On some hand-held units, there may be a communication error during the save, but simply retry to continue.

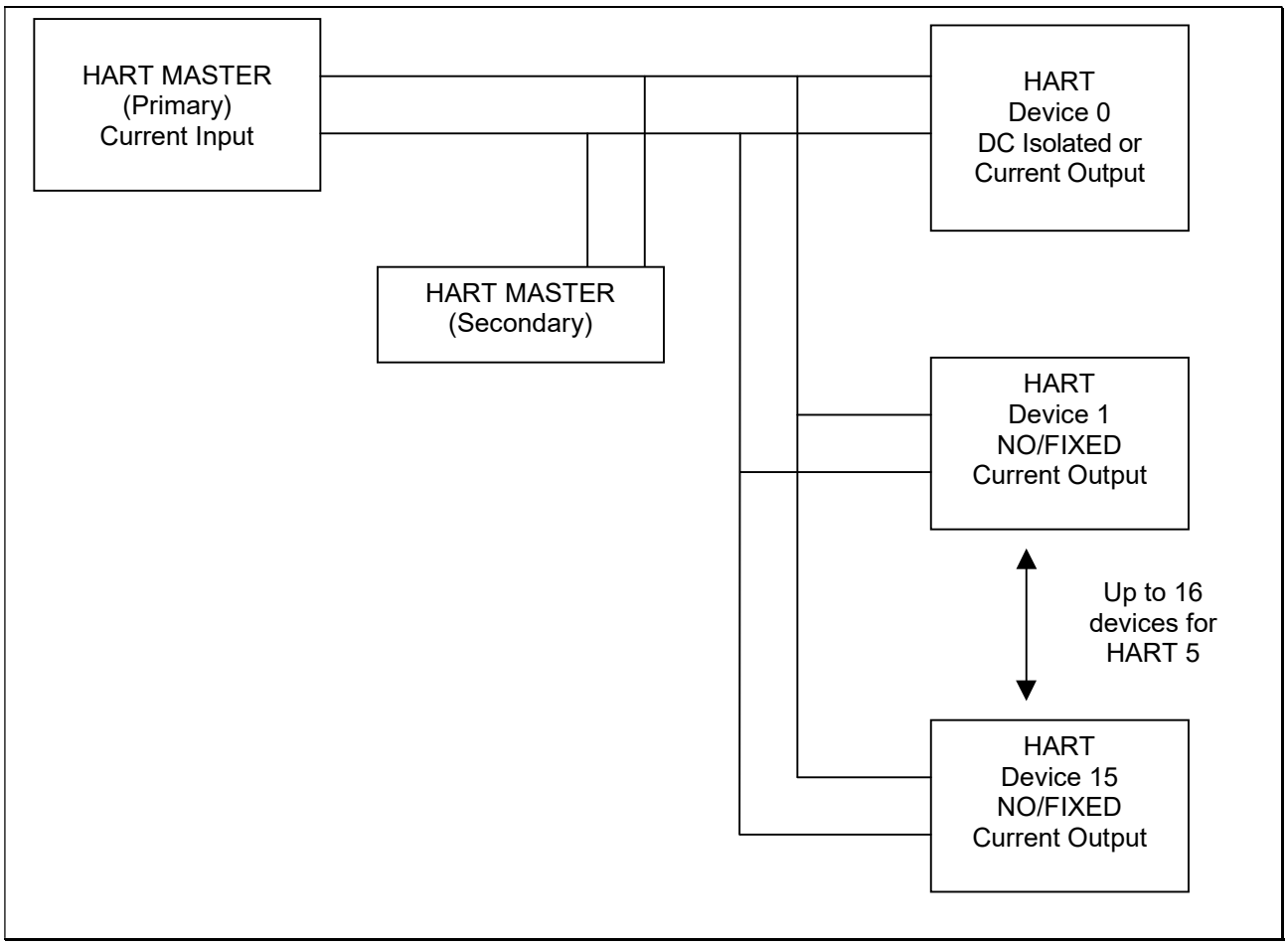

Figure 10.1 - Typical HART® Connection Diagram

11.1. COMMAND 128: READ FLOATING-POINT DEVICE PARAMETERS

This command allows a Master to request the value of up to four Floating-Point Device Parameters. In other words, a Master may request only 1, 2, 3, or 4 Floating-Point Device Parameters. The Field Device must answer these Master requests without returning Response Code 5, *Too Few Data Bytes Received*. If the Field Device receives 1, 2, or 3 Request Data Bytes, it must return only the corresponding number of Floating-Point Device Parameters (see table below).

For a list of Floating-Point Device Parameters, please refer to the *Floating-Point Device Parameter Table*.

11.1.1. Command 128 Response

Command 128 Response Based on Number of Floating-Point Device Parameters Requested

Number of Device Parameters Requested	Number of Requested Data Bytes	Number of Response Data Bytes
1	1	7
2	2	14
3	3	21
4	4	28

11.1.2. Request Data Bytes

Byte	Format	Description
0	Unsigned-8	Slot 0: Floating-Point Device Parameter Code
1	Unsigned-8	Slot 1: Floating-Point Device Parameter Code
2	Unsigned-8	Slot 2: Floating-Point Device Parameter Code
3	Unsigned-8	Slot 3: Floating-Point Device Parameter Code

11.1.3. Response Data Bytes

Byte	Format	Description
0	Unsigned-8	Slot 0: Floating-Point Device Parameter Code
1	Enum	Slot 0: Floating-Point Device Parameter Variable Classification
2	Enum	Slot 0: Floating-Point Device Parameter Unit Code
3 - 6	Float	Slot 0: Floating-Point Device Parameter Value
7	Unsigned-8	Slot 1: Floating-Point Device Parameter Code
8	Enum	Slot 1: Floating-Point Device Parameter Variable Classification
9	Enum	Slot 1: Floating-Point Device Parameter Unit Code
10 - 13	Float	Slot 1: Floating-Point Device Parameter Value
14	Unsigned-8	Slot 2: Floating-Point Device Parameter Code
15	Enum	Slot 2: Floating-Point Device Parameter Variable Classification
16	Enum	Slot 2: Floating-Point Device Parameter Unit Code
17 -20	Float	Slot 2: Floating-Point Device Parameter Value
21	Unsigned-8	Slot 3: Floating-Point Device Parameter Code
22	Enum	Slot 3: Floating-Point Device Parameter Variable Classification
23	Enum	Slot 3: Floating-Point Device Parameter Unit Code
24 - 27	Float	Slot 3: Floating-Point Device Parameter Value

11.1.4. Command-Specific Response Codes

Code	Class	Description
0	Success	No Command-Specific Errors
2	Error	Invalid Selection
5	Error	Too Few Data Bytes Received
32	Error	Device Busy

11.2. COMMAND 129: WRITE FLOATING-POINT DEVICE PARAMETER

This command allows a Master to set the value of one Floating-Point Device Parameter. The Floating-Point Device Parameter Unit Code received with this command does not affect the Floating-Point Device Parameter Units of the Field Device. The Floating-Point Device Parameter value will be returned in the same units as received.

For a list of Floating-Point Device Parameters, please refer to the *Floating-Point Device Parameter Table*.

11.2.1. Request Data Bytes

Byte	Format	Description
0	Unsigned-8	Floating-Point Device Parameter Code
1	Enum	Floating-Point Device Parameter Variable Classification
2	Enum	Floating-Point Device Parameter Unit Code
3 - 6	Float	Floating-Point Device Parameter Value

11.2.2. Response Data Bytes

Byte	Format	Description
0	Unsigned-8	Floating-Point Device Parameter Code
1	Enum	Floating-Point Device Parameter Variable Classification
2	Enum	Floating-Point Device Parameter Unit Code
3 - 6	Float	Floating-Point Device Parameter Value

11.2.3. Command-Specific Response Codes

Code	Class	Description
0	Success	No Command-Specific Errors
2	Error	Invalid Selection
3	Error	Value too high
4	Error	Value too low
5	Error	Too Few Data Bytes Received
7	Error	In Write-Protect Mode
12	Error	Invalid Variable Classification
18	Error	Invalid Unit Code
32	Error	Device Busy

11.3. COMMAND 130: READ DISCRETE

This command allows a Master to read one Device Discrete value.
For a list of Device Discrete, please refer to the *Device Discrete Table*.

11.3.1. Request Data Bytes

Byte	Format	Description
0	Unsigned-8	Device Discrete Code

11.3.2. Response Data Bytes

Byte	Format	Description
0	Unsigned-8	Device Discrete Code
1	Bit – 0	Device Discrete Value

11.3.3. Command-Specific Response Codes

Code	Class	Description
0	Success	No Command-Specific Errors
2	Error	Invalid Selection
5	Error	Too Few Data Bytes Received
32	Error	Device Busy

11.4. COMMAND 131: WRITE DISCRETE

This command allows a Master to write one Device Discrete value.
For a list of Device Discrete, please refer to the *Device Discrete Table*.

11.4.1. Request Data Bytes

Byte	Format	Description
0	Unsigned-8	Device Discrete Code
1	Bit – 0	Device Discrete Value

11.4.2. Response Data Bytes

Byte	Format	Description
0	Unsigned-8	Device Discrete Code
1	Bit – 0	Device Discrete Value

11.4.3. Command-Specific Response Codes

Code	Class	Description
0	Success	No Command-Specific Errors
2	Error	Invalid Selection
5	Error	Too Few Data Bytes Received
7	Error	In Write-Protect Mode
12	Error	Invalid Value
32	Error	Device Busy

11.5. COMMAND 132: READ INTEGER DEVICE PARAMETER

This command allows a Master to request the value of up to four Integer Device Parameters. In other words, a Master may request only 1, 2, 3, or 4 Integer Device Parameters. The Field Device must answer these Master requests without returning Response Code 5, *Too Few Data Bytes Received*. If the Field Device receives 1, 2, or 3 Request Data Bytes, it must return only the corresponding number of Integer Device Parameters (see table below).

For a list of Integer Device Parameters, please refer to the *Integer Device Parameter Table*.

11.5.1. Command 132 Response Based on Number of Integer Device Parameters Requested

Number of Device Parameters Requested	Number of Requested Data Bytes	Number of Response Data Bytes
1	1	5
2	2	10
3	3	15
4	4	20

11.5.2. Request Data Bytes

Byte	Format	Description
0	Unsigned-8	Slot 0: Integer Device Parameter Code
1	Unsigned-8	Slot 1: Integer Device Parameter Code
2	Unsigned-8	Slot 2: Integer Device Parameter Code
3	Unsigned-8	Slot 3: Integer Device Parameter Code

11.5.3. Response Data Bytes

Byte	Format	Description
0	Unsigned-8	Slot 0: Integer Device Parameter Code
1	Enum	Slot 0: Integer Device Parameter Variable Classification
2	Enum	Slot 0: Integer Device Parameter Unit Code
3 – 4	Unsigned-16	Slot 0: Integer Device Parameter Value
5	Unsigned-8	Slot 1: Integer Device Parameter Code
6	Enum	Slot 1: Integer Device Parameter Variable Classification
7	Enum	Slot 1: Integer Device Parameter Unit Code
8 – 9	Unsigned-16	Slot 1: Integer Device Parameter Value
10	Unsigned-8	Slot 2: Integer Device Parameter Code
11	Enum	Slot 2: Integer Device Parameter Variable Classification
12	Enum	Slot 2: Integer Device Parameter Unit Code
13 – 14	Unsigned-16	Slot 2: Integer Device Parameter Value
15	Unsigned-8	Slot 3: Integer Device Parameter Code
16	Enum	Slot 3: Integer Device Parameter Variable Classification
17	Enum	Slot 3: Integer Device Parameter Unit Code
18 – 19	Unsigned-16	Slot 3: Integer Device Parameter Value

11.5.4. Command-Specific Response Codes

Code	Class	Description
0	Success	No Command-Specific Errors
2	Error	Invalid Selection
5	Error	Too Few Data Bytes Received
32	Error	Device Busy

11.6. COMMAND 133: WRITE INTEGER DEVICE PARAMETER

This command allows a Master to set the value of one Integer Device Parameter. The Integer Device Parameter Unit Code received with this command does not affect the Integer Device Parameter Units of the Field Device. The Integer Device Parameter value will be returned in the same units as received.

For a list of Integer Device Parameters, please refer to the *Integer Device Parameter Table*.

11.6.1. Request Data Bytes

Byte	Format	Description
0	Unsigned-8	Integer Device Parameter Code
1	Enum	Integer Device Parameter Variable Classification
2	Enum	Integer Device Parameter Unit Code
3 - 4	Integer-16	Integer Device Parameter Value

11.6.1.1.1.1.1.1.1. Response Data Bytes

Byte	Format	Description
0	Unsigned-8	Integer Device Parameter Code
1	Enum	Integer Device Parameter Variable Classification
2	Enum	Integer Device Parameter Unit Code
3 – 4	Integer-16	Integer Device Parameter Value

11.6.1.1.1.1.1.1.2. Command-Specific Response Codes

Code	Class	Description
0	Success	No Command-Specific Errors
2	Error	Invalid Selection
3	Error	Value too high
4	Error	Value too low
5	Error	Too Few Data Bytes Received
7	Error	In Write-Protect Mode
12	Error	Invalid Variable Classification
18	Error	Invalid Unit Code
32	Error	Device Busy

11.7. COMMAND 134: READ DEVICE VARIABLES

This command allows a Master to request the value of up to four Device Variables. In other words, a Master may request only 1, 2, 3, or 4 Device Variables. The Field Device must answer these Master requests without returning Response Code 5, *Too Few Data Bytes Received*. If the Field Device receives 1, 2, or 3 Request Data Bytes, it must return only the corresponding number of Device Variables (see table below).

For a list of Device Variables, please refer to the *Device Variable Table*.

11.7.1. Command 134 Response Based on Number of Device Variables Requested

Number of Device Variables Requested	Number of Requested Data Bytes	Number of Response Data Bytes
1	1	9
2	2	17
3	3	25
4	4	33

11.7.2. Request Data Bytes

Byte	Format	Description
0	Unsigned-8	Slot 0: Device Variable Code
1	Unsigned-8	Slot 1: Device Variable Code
2	Unsigned-8	Slot 2: Device Variable Code
3	Unsigned-8	Slot 3: Device Variable Code

11.7.3. Response Data Bytes

Byte	Format	Description
0	Bits	Extended Field Device Status
1	Unsigned-8	Slot 0: Device Variable Code
2	Enum	Slot 0: Device Variable Classification
3	Enum	Slot 0: Device Variable Unit Code
4 – 7	Float	Slot 0: Device Variable Value
8	Bits	Slot 0: Device Variable Status
9	Unsigned-8	Slot 1: Device Variable Code
10	Enum	Slot 1: Device Variable Classification
11	Enum	Slot 1: Device Variable Unit Code
12 – 15	Float	Slot 1: Device Variable Value
16	Bits	Slot 1: Device Variable Status
17	Unsigned-8	Slot 2: Device Variable Code
18	Enum	Slot 2: Device Variable Variable Classification
19	Enum	Slot 2: Device Variable Unit Code
20 – 23	Float	Slot 2: Device Variable Value
24	Bits	Slot 2: Device Variable Status
25	Unsigned-8	Slot 3: Device Variable Code
26	Enum	Slot 3: Device Variable Variable Classification
27	Enum	Slot 3: Device Variable Unit Code

28 – 31	Float	Slot 3: Device Variable Value
32	Bits	Slot 3: Device Variable Status

11.7.4. Command-Specific Response Codes

Code	Class	Description
0	Success	No Command-Specific Errors
2	Error	Invalid Selection
5	Error	Too Few Data Bytes Received
32	Error	Device Busy

11.8. COMMAND 135: READ INTEGER DEVICE VARIABLES

This command allows a Master to request the value of up to four Integer Device Variables. In other words, a Master may request only 1, 2, 3, or 4 Integer Device Variables. The Field Device must answer these Master requests without returning Response Code 5, *Too Few Data Bytes Received*. If the Field Device receives 1, 2, or 3 Request Data Bytes, it must return only the corresponding number of Integer Device Variables. For a list of Integer Device Variables, please refer to the *Integer Device Variable Table*.

11.8.1. Command 135 Response Based on Number of Integer Device Parameters Requested

Number of Device Parameters Requested	Number of Requested Data Bytes	Number of Response Data Bytes
1	1	5
2	2	10
3	3	15
4	4	20

11.8.2. Request Data Bytes

Byte	Format	Description
0	Unsigned-8	Slot 0: Integer Device Parameter Code
1	Unsigned-8	Slot 1: Integer Device Parameter Code
2	Unsigned-8	Slot 2: Integer Device Parameter Code
3	Unsigned-8	Slot 3: Integer Device Parameter Code

11.8.3. Response Data Bytes

Byte	Format	Description
0	Unsigned-8	Slot 0: Integer Device Parameter Code
1	Enum	Slot 0: Integer Device Parameter Variable Classification
2	Enum	Slot 0: Integer Device Parameter Unit Code
3 – 4	Unsigned-16	Slot 0: Integer Device Parameter Value
5	Unsigned-8	Slot 1: Integer Device Parameter Code
6	Enum	Slot 1: Integer Device Parameter Variable Classification
7	Enum	Slot 1: Integer Device Parameter Unit Code
8 – 9	Unsigned-16	Slot 1: Integer Device Parameter Value
10	Unsigned-8	Slot 2: Integer Device Parameter Code
11	Enum	Slot 2: Integer Device Parameter Variable Classification
12	Enum	Slot 2: Integer Device Parameter Unit Code
13 – 14	Unsigned-16	Slot 2: Integer Device Parameter Value
15	Unsigned-8	Slot 3: Integer Device Parameter Code
16	Enum	Slot 3: Integer Device Parameter Variable Classification
17	Enum	Slot 3: Integer Device Parameter Unit Code
18 – 19	Unsigned-16	Slot 3: Integer Device Parameter Value

11.8.4. Command-Specific Response Codes

Code	Class	Description
0	Success	No Command-Specific Errors
2	Error	Invalid Selection
5	Error	Too Few Data Bytes Received
32	Error	Device Busy

11.9. HART® TABLES

11.9.1. HART® DYNAMIC VARIABLES

The following table lists the Dynamic Variables that are available using the HART® protocol.

Dynamic Variable Number	Description
0 PRIMARY	Process (Water Cut)
1 SECONDARY	Temperature
2 TERTIARY	Emulsion Phase – 0.0 = Oil continuous, 1.0 = Water continuous, 2.0 = Undetermined

11.9.2. HART® DEVICE PARAMETERS – FLOATING-POINT

The following table lists the Floating-Point Device Parameters that are available to be read and written using the HART® protocol. Command 128 reads one through four Floating-Point Device Parameters and Command 129 writes one Floating-Point Device Parameter.

Parameter Number	Description
0	Salinity – based on Stream Number
1	Oil Adjust (Cal. Factor) – based on Stream Number
2	Oil Frequency Index
3	Water Adjust – based on Stream Number
4	Water Frequency Index
5	Alarm Relay Set Point – based on Stream Number (Standard Electronics Only)
6	Output Loop 4 mA Point
7	Output Loop 20 mA Point
8	Temperature Adjust
9	Oil P0
10	Oil P1
11	Oil Low Frequency
12	Oil High Frequency
13	Water Low Frequency
14	Water High Frequency
15	Auto-Cal Oil Value
16	Auto-Cal Water Value
17	Calibration API
18	Density Correction A1 Coefficient
19	Density Correction A0 Coefficient
20	4 mA API Density
21	20 mA API Density
22	4 mA kg/m3 Density
23	20 mA kg/m3 Density

11.9.3. HART® DEVICE DISCRETES

The following table lists the Device Discrete items that are available to be read and written using the HART® protocol. Command 130 reads one Device Discrete and Command 131 writes one Device Discrete. A value of 0 = OFF and 1 = ON.

Discrete Number	Description
0	Alarm Relay (Standard Electronics - Read Only)
1	Error Relay (Standard Electronics - Read Only)
2	Write Protect
3	Clear Gross Fluid Accumulators
4	Restore Factory Defaults
5	Restore Stream (Well) Defaults
6	Master Reset
7	Clear Analyzer Diagnostics
8	Clear Analyzer Error Code
9	Built-In Test Enable
10	Alarm Relay Greater Than or Equal to Set Point
11	Stream Select Mode (Standard Electronics)
12	Error Relay Normally Closed
13	Temperature in degrees C
14	Use HART® Universal Command Revision 5
15	Active Current Loop Mode
16	Capture Oil Auto-Cal Data
17	Capture Water Auto-Cal Data
18	Modbus Enable
19	Dual Pulsed Relays
20	Emulsion Phase Relay
21	Temperature Averaging
22	Data Change Indicator
23	Save Configuration

11.9.4. HART® DEVICE PARAMETERS – INTEGER

The following table lists the Integer Device Parameters that are available to be read and written using the HART® protocol. Command 132 reads one through four Integer Device Parameters and Command 133 writes one Integer Device Parameter.

Parameter Number	Description
0	Stream Number
1	Samples to Average
2	Phase Holdover Cycles
3	Alarm Relay Delay
4	Flow Meter Type
5	Flow Volume Units
6	Flow Rate Time Units
7	Counts Per Flow Unit
8	20 mA Maximum Flow Rate Input
9	Accumulator Display Format
10	4 mA D/A Counts
11	20 mA D/A Counts
12	HART Response Delay
13	Number of Response Preambles
14	Reference Current Mode
15	Oil Auto-Cal Samples
16	Water Auto-Cal Samples
17	Density Correction Mode
18	Modbus Slave Address
19	Modbus Baud Rate
20	Modbus Parity
21	Modbus Stop Bits
22	Modbus Response Delay

11.9.5. HART® DEVICE VARIABLES

The following table lists the Device Variables that are available to be read using the HART® protocol. Command 134 reads one through four Device Variables. Command 135 reads one through four Integer Device Variables.

Variable Number	Description
0	Water Cut
1	Temperature
2	Emulsion Phase – 0.0 = Oil-continuous, 1.0 = Water-continuous, 2.0 = Undetermined
3	Analyzer Diagnostics
4	Analyzer Error Code
5	Oil Oscillator Frequency
6	Oil Oscillator Incident Power
7	Oil Oscillator Reflected Power
8	Water Oscillator Frequency
9	Water Oscillator Incident Power
10	Water Oscillator Reflected Power
11	Gross Oil Accumulator (Flow Meter Required)
12	Gross Water Accumulator (Flow Meter Required)
13	Gross Total Fluids Accumulator (Flow Meter Required)
14	Oil Flow Rate (Flow Meter Required)
15	Water Flow Rate (Flow Meter Required)
16	Total Fluid Flow Rate (Flow Meter Required)
17	Internal Temperature (Stand-alone Electronics Only)
18	Analog Input 1
19	Analog Input 1 Percent of Range
20	Analog Input 2
21	Analog Input 2 Percent of Range
22	Analog Input 3
23	Analog Input 3 Percent of Range
24	Analog Input 4
25	Analog Input 4 Percent of Range
26	Analog Input 5
27	Analog Input 5 Percent of Range
28	Analog Output 1
29	Analog Output 1 Percent of Range
30	Analog Output 2
31	Analog Output 2 Percent of Range
32	Analog Output 3
33	Analog Output 3 Percent of Range
34	Analog Output 4
35	Analog Output 4 Percent of Range
36	Analog Output 5
37	Analog Output 5 Percent of Range

38	Analog Output 6
39	Analog Output 6 Percent of Range
40	Analog Output 7
41	Analog Output 7 Percent of Range
42	Analog Output 8
43	Analog Output 8 Percent of Range
44	Analog Output 9
45	Analog Output 9 Percent of Range
46	Flow Computer 1 – Pulse Frequency
47	Flow Computer 1 – Water Content
48	Flow Computer 1 – Temperature
49	Flow Computer 1 – Pressure
50	Flow Computer 1 – Salinity
51	Flow Computer 1 – Density
52	Flow Computer 1 – Oil Density
53	Flow Computer 1 – Water Density
54	Flow Computer 1 – Oil Flow Rate
55	Flow Computer 1 – Water Flow Rate
56	Flow Computer 1 – Total Flow Rate
57	Flow Computer 1 – Gross Oil
58	Flow Computer 1 – Gross Water
59	Flow Computer 1 – Gross Total
60	Flow Computer 1 – Net Oil
61	Flow Computer 1 – Net Water
62	Flow Computer 1 – Net Total
63	Flow Computer 1 – Net Flow Rate Oil
64	Flow Computer 1 – Net Flow Rate Water
65	Flow Computer 1 – Net Flow Rate Total
66	Flow Computer 2 – Pulse Frequency
67	Flow Computer 2 – Water Content
68	Flow Computer 2 – Temperature
69	Flow Computer 2 – Pressure
70	Flow Computer 2 – Salinity
71	Flow Computer 2 – Density
72	Flow Computer 2 – Oil Density
73	Flow Computer 2 – Water Density
74	Flow Computer 2 – Oil Flow Rate
75	Flow Computer 2 – Water Flow Rate
76	Flow Computer 2 – Total Flow Rate
77	Flow Computer 2 – Gross Oil
78	Flow Computer 2 – Gross Water
79	Flow Computer 2 – Gross Total
80	Flow Computer 2 – Net Oil
81	Flow Computer 2 – Net Water
82	Flow Computer 2 – Net Total

83	Flow Computer 2 – Net Flow Rate Oil
84	Flow Computer 2 – Net Flow Rate Water
85	Flow Computer 2 – Net Flow Rate Total
86	Flow Computer 3 – Pulse Frequency
87	Flow Computer 3 – Water Content
88	Flow Computer 3 – Temperature
89	Flow Computer 3 – Pressure
90	Flow Computer 3 – Salinity
91	Flow Computer 3 – Density
92	Flow Computer 3 – Oil Density
93	Flow Computer 3 – Water Density
94	Flow Computer 3 – Oil Flow Rate
95	Flow Computer 3 – Water Flow Rate
96	Flow Computer 3 – Total Flow Rate
97	Flow Computer 3 – Gross Oil
98	Flow Computer 3 – Gross Water
99	Flow Computer 3 – Gross Total
100	Flow Computer 3 – Net Oil
101	Flow Computer 3 – Net Water
102	Flow Computer 3 – Net Total
103	Flow Computer 3 – Net Flow Rate Oil
104	Flow Computer 3 – Net Flow Rate Water
105	Flow Computer 3 – Net Flow Rate Total
106	CCM Gas Flow Rate
107	CCM Gas Total
108	CCM Gas Density
109	Stream Select
110	Salinity
111	CCM Vessel Level 1
112	CCM Vessel Level 2
113	CCM Set point Level 1
114	CCM Set point Level 2
115	CCM Vessel Pressure 1
116	CCM Vessel Pressure 2
117	CCM Vessel Pressure Set point 1
118	CCM Vessel Pressure Set point 2

Integer Device Variable Table

Variable Number	Description
0	HART® Diagnostics
1	Analyzer Diagnostics
2	Analyzer Error Code
3	Emulsion Phase 0 = Oil-continuous, 1 = Water-continuous, 2 = Undetermined
4	Analyzer Diagnostics Enumerated

12. Dimensional Installation Drawings

Attached are various installation drawings needed for proper mounting and installation of the Low Range Phase Dynamics Water in Hydrocarbon Analyzer. Please consult the factory for other drawings not included.

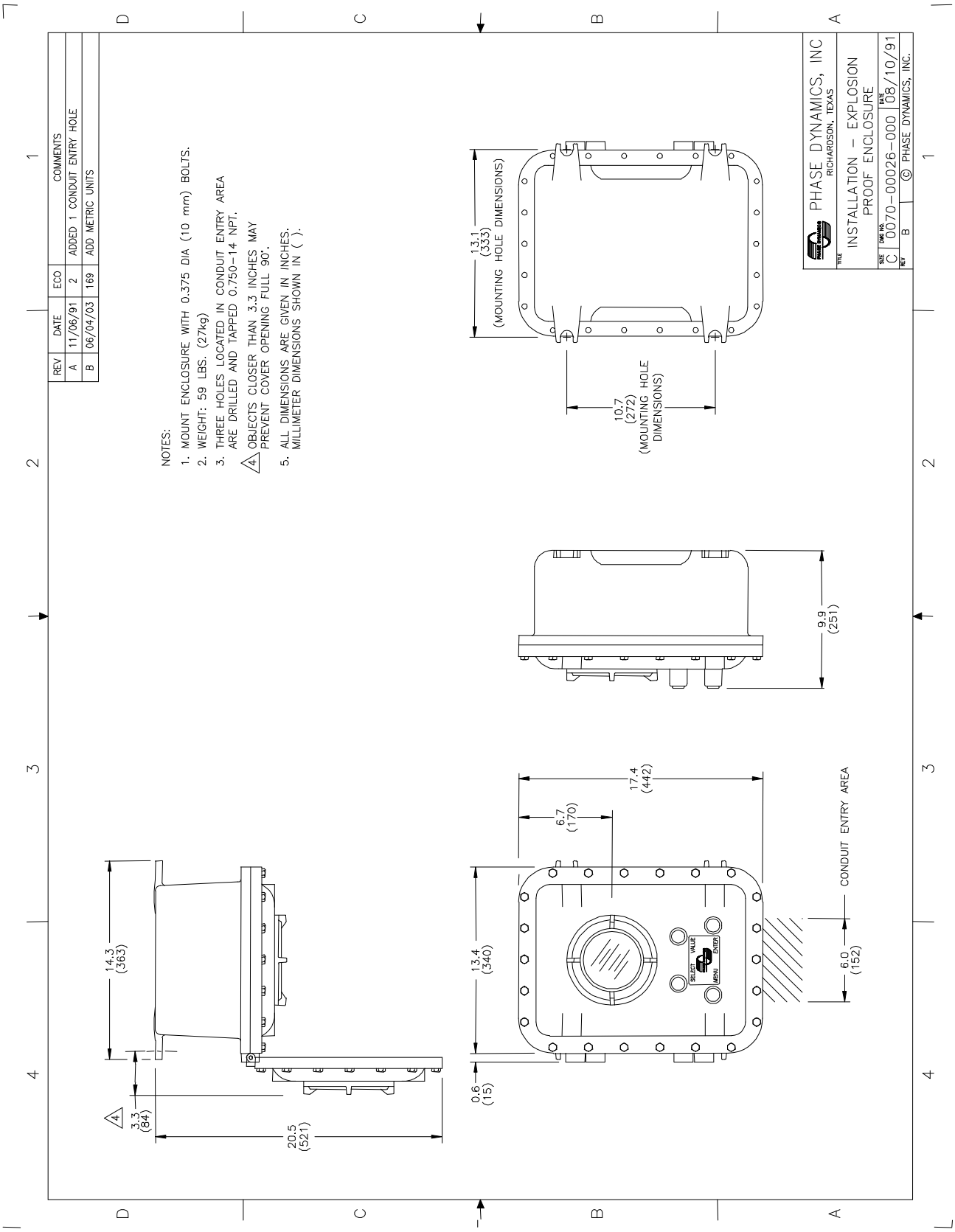
REV | DATE | ECO | COMMENTS
A | 11/06/91 | 2 | ADDED 1 CONDUIT ENTRY HOLE
B | 06/04/03 | 169 | ADD METRIC UNITS
NOTES:
1. MOUNT ENCLOSURE WITH 0.375 DIA (10 mm) BOLTS.
2. WEIGHT: 59 LBS. (27kg)
3. THREE HOLES LOCATED IN CONDUIT ENTRY AREA ARE DRILLED AND TAPPED 0.750-14 NPT.
4. OBJECTS CLOSER THAN 3.3 INCHES MAY PREVENT COVER OPENING FULL 90°.
5. ALL DIMENSIONS ARE GIVEN IN INCHES. MILLIMETER DIMENSIONS SHOWN IN ( ).
13.1 (333) (MOUNTING HOLE DIMENSIONS)
10.7 (272) (MOUNTING HOLE DIMENSIONS)
9.9 (251)
17.4 (442)
6.7 (170)
13.4 (340)
0.6 (15)
CONDUIT ENTRY AREA
6.0 (152)
14.3 (363)
3.3 (84)
20.5 (521)
SELECT
VALUE
MENU
ENTER
PHASE DYNAMICS, INC
RICHARDSON, TEXAS
TITLE
INSTALLATION - EXPLOSION PROOF ENCLOSURE
SIZE C
DWG NO. 0070-00026-000
DATE 08/10/91
REV B
© PHASE DYNAMICS, INC.

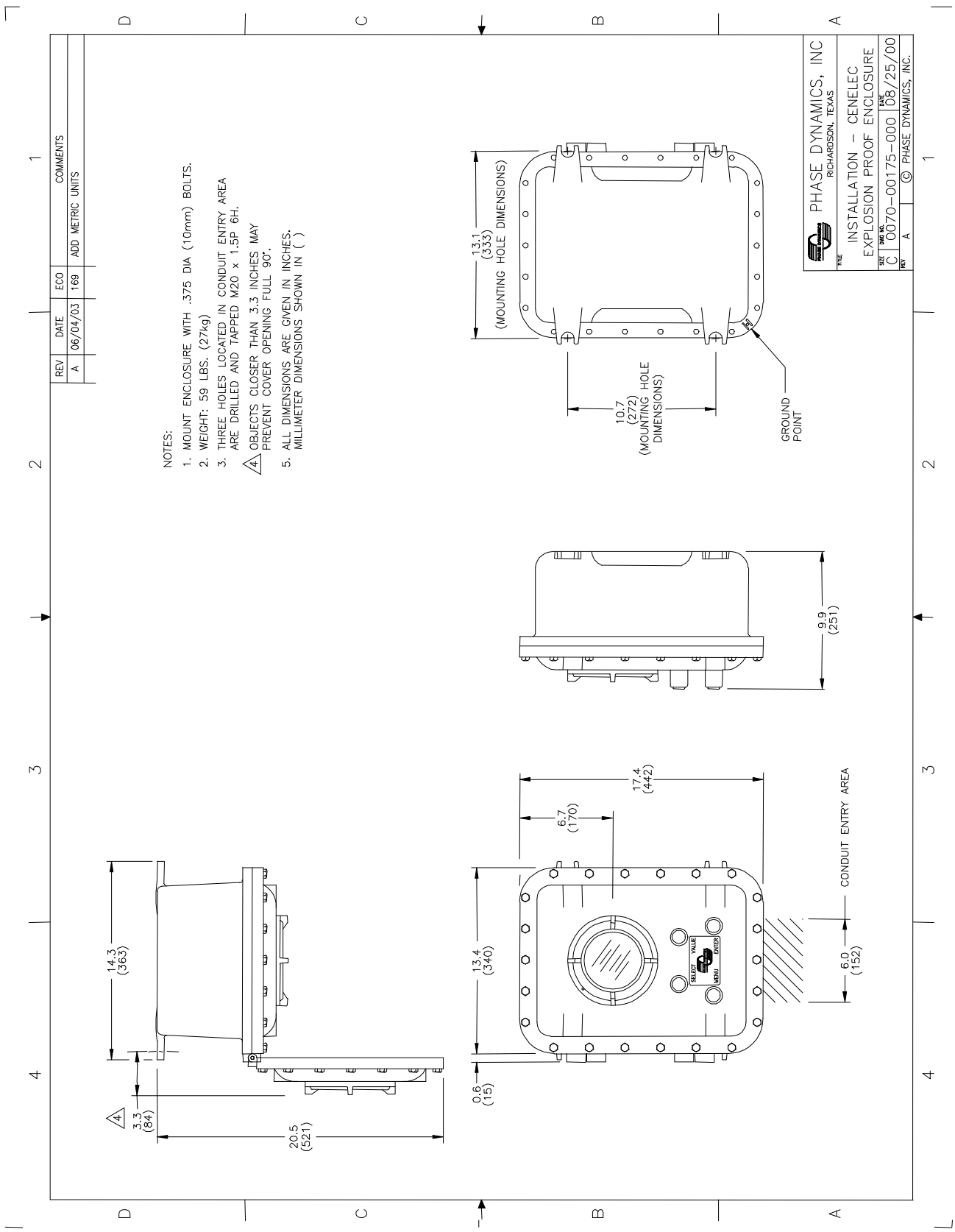
REV | DATE | ECO | COMMENTS
A | 06/04/03 | 169 | ADD METRIC UNITS
NOTES:
1. MOUNT ENCLOSURE WITH .375 DIA (10mm) BOLTS.
2. WEIGHT: 59 LBS. (27kg)
3. THREE HOLES LOCATED IN CONDUIT ENTRY AREA ARE DRILLED AND TAPPED M20 x 1.5P 6H.
4 OBJECTS CLOSER THAN 3.3 INCHES MAY PREVENT COVER OPENING FULL 90°.
5. ALL DIMENSIONS ARE GIVEN IN INCHES. MILLIMETER DIMENSIONS SHOWN IN ( )
13.1 (333) (MOUNTING HOLE DIMENSIONS)
10.7 (272) (MOUNTING HOLE DIMENSIONS)
GROUND POINT
9.9 (251)
17.4 (442)
6.7 (170)
CONDUIT ENTRY AREA
6.0 (152)
13.4 (340)
0.6 (15)
14.3 (363)
3.3 (84)
20.5 (521)
SELECT
VALUE
MENU
ENTER
PHASE DYNAMICS, INC
RICHARDSON, TEXAS
TITLE
INSTALLATION - CENELEC
EXPLOSION PROOF ENCLOSURE
SIZE C
DWG NO. 0070-00175-000
DATE 08/25/00
REV A
© PHASE DYNAMICS, INC.

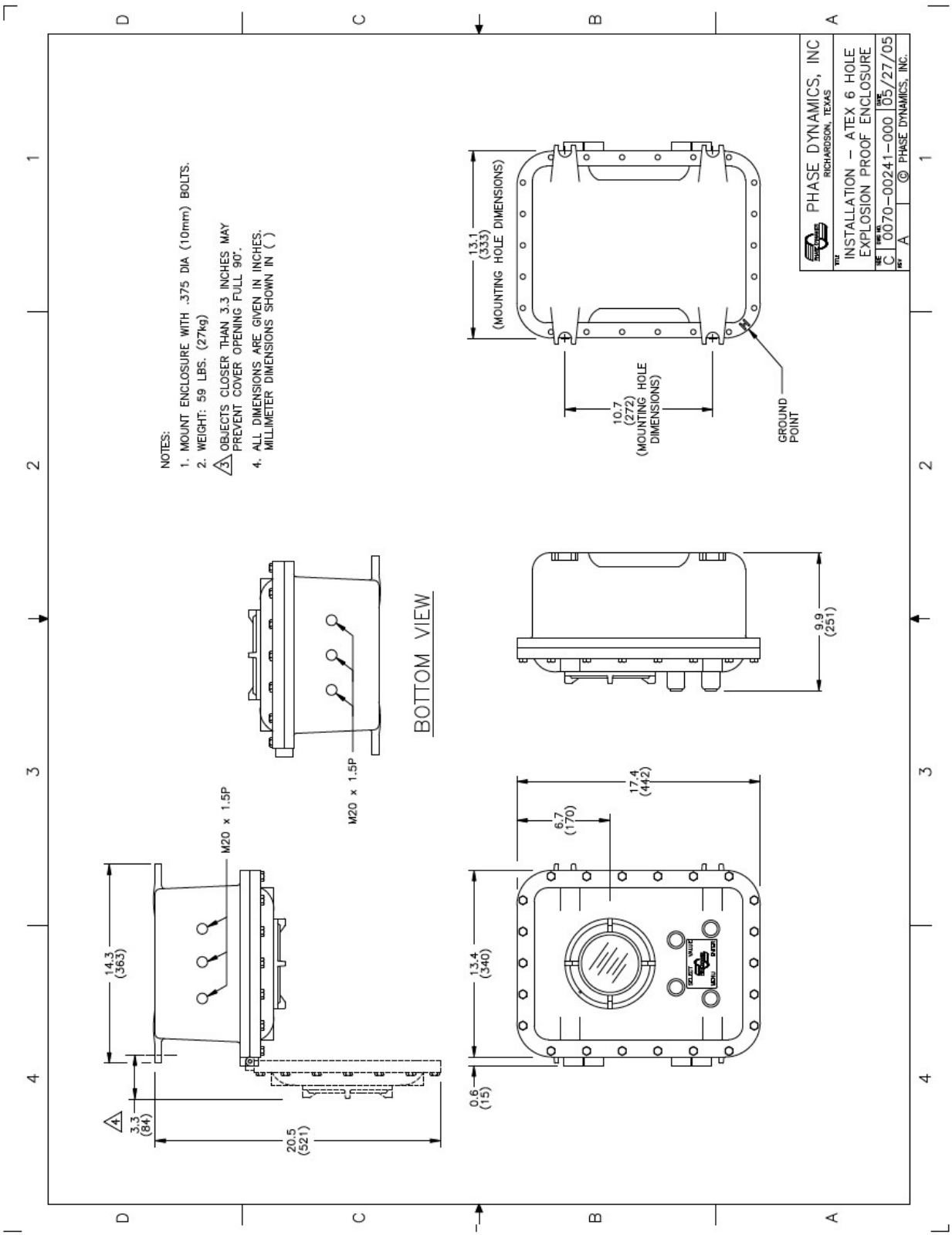
NOTES:
1. MOUNT ENCLOSURE WITH .375 DIA (10mm) BOLTS.
2. WEIGHT: 59 LBS. (27kg)
3. OBJECTS CLOSER THAN 3.3 INCHES MAY PREVENT COVER OPENING FULL 90°.
4. ALL DIMENSIONS ARE GIVEN IN INCHES. MILLIMETER DIMENSIONS SHOWN IN ( )
13.1 (333) (MOUNTING HOLE DIMENSIONS)
10.7 (272) (MOUNTING HOLE DIMENSIONS)
GROUND POINT
BOTTOM VIEW
M20 x 1.5P
M20 x 1.5P
9.9 (251)
17.4 (442)
6.7 (170)
14.3 (363)
13.4 (340)
3.3 (84)
20.5 (521)
0.6 (15)
PHASE DYNAMICS, INC
RICHARDSON, TEXAS
TITLE
INSTALLATION – ATEX 6 HOLE EXPLOSION PROOF ENCLOSURE
SIZE C
FSCM NO. 0070-00241-000
DATE 05/27/05
REV A
© PHASE DYNAMICS, INC.

REV	DATE	ECO	COMMENTS
A	02/16/98	117	CHG HINGES, LATCHES 15.35 DIM WAS 15.3
B	01/20/99	131	ADD NOTE 8 TO MEET FM REQUIREMENTS
C	06/04/03	169	ADD METRIC UNITS

NOTES:

1. MOUNT ENCLOSURE WITH .375 DIA (10) BOLTS.
2. WEIGHT: 16 LBS. (7kg)
3. OBJECTS CLOSER THAN 3.0 INCHES (76) MAY PREVENT COVER FROM OPENING FULL 90°
4. OBJECTS CLOSER THAN 4.0 INCHES (102) MAY HINDER LATCH OPERATION.
5. ENCLOSURE IS GRAY MOLDED FIBERGLASS, WINDOW IS 0.125 THICK POLYCARBONATE
6. THREE HOLES LOCATED IN CONDUIT ENTRY AREA ARE 1.06 DIA. (27 DIA)
7. ALL DIMENSIONS ARE GIVEN IN INCHES. MILLIMETER DIMENSIONS SHOWN IN ( )
8. 4 EA #10–32 X 3/4 STAINLESS SCREWS ARE SUPPLIED TO MEET FM REQUIREMENTS. (TORQUE TO 22 INCH LBS)

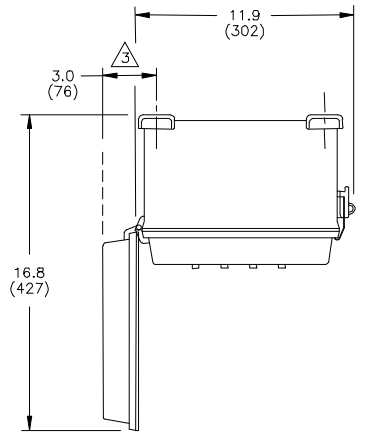

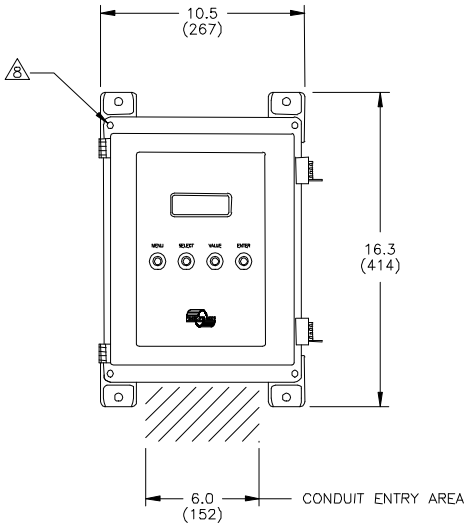

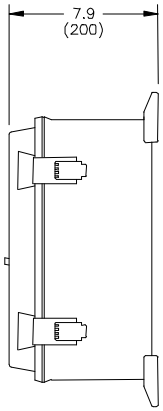

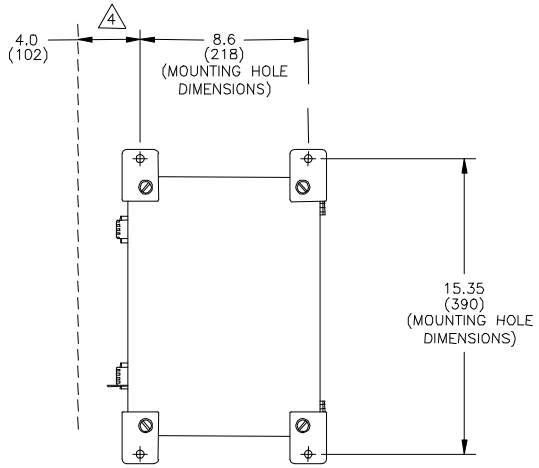

PHASE DYNAMICS, INC
RICHARDSON, TEXAS

TITLE: INSTALLATION, NEMA 4X ENCLOSURE– EXT SWITCHES

SIZE	DWG NO.	DATE
C	0070–00037–000	03/31/92
REV C	© PHASE DYNAMICS, INC.	

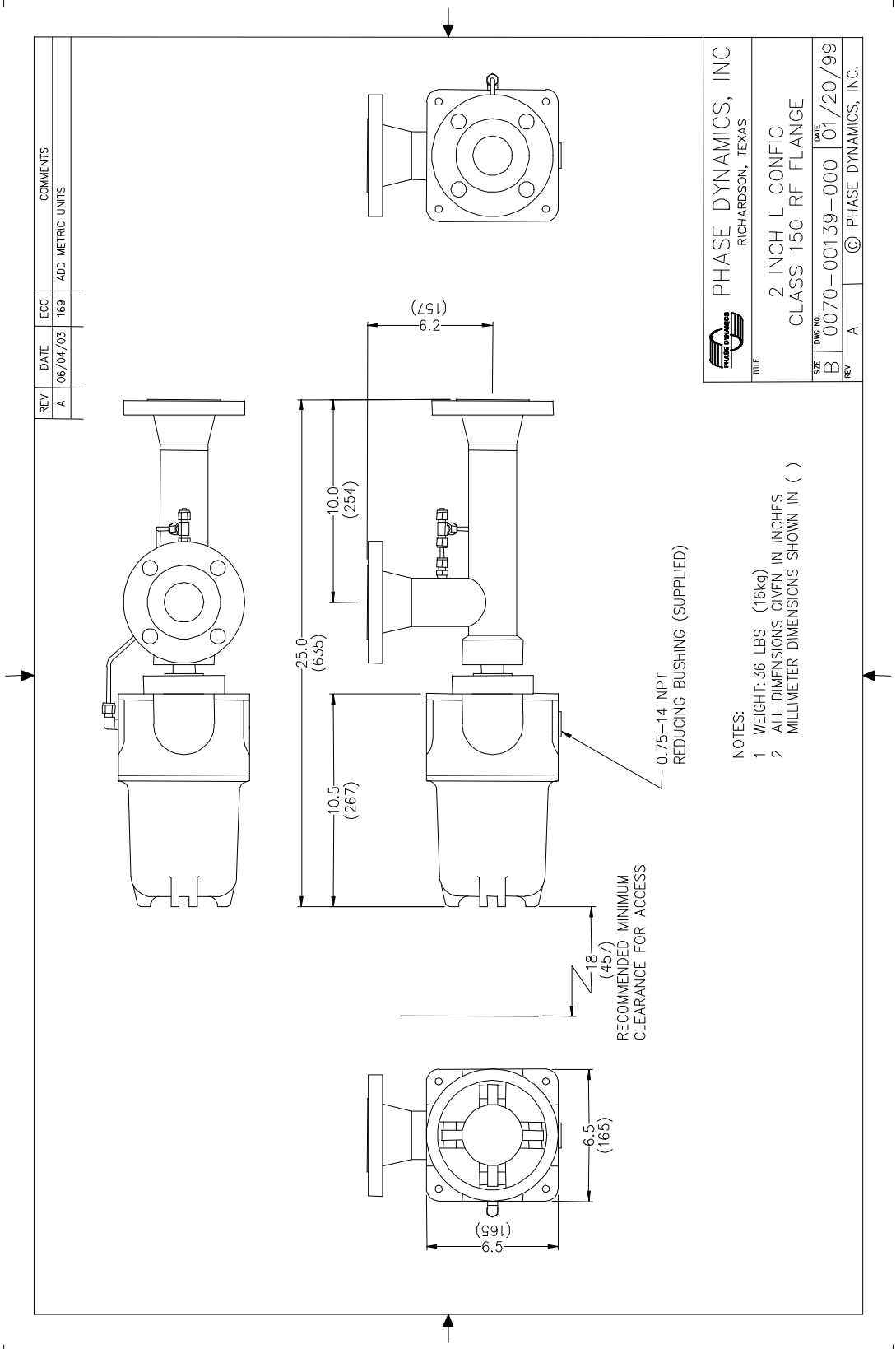
REV
DATE
ECO
COMMENTS
A
06/04/03
169
ADD METRIC UNITS
PHASE DYNAMICS, INC
RICHARDSON, TEXAS
TITLE
2 INCH L CONFIG
CLASS 150 RF FLANGE
SIZE
B
DWG NO.
0070-00139-000
DATE
01/20/99
REV
A
© PHASE DYNAMICS, INC.
6.2
(157)
10.0
(254)
25.0
(635)
10.5
(267)
0.75-14 NPT
REDUCING BUSHING (SUPPLIED)
18
(457)
RECOMMENDED MINIMUM
CLEARANCE FOR ACCESS
6.5
(165)
6.5
(165)
NOTES:
1 WEIGHT: 36 LBS (16kg)
2 ALL DIMENSIONS GIVEN IN INCHES
MILLIMETER DIMENSIONS SHOWN IN ( )

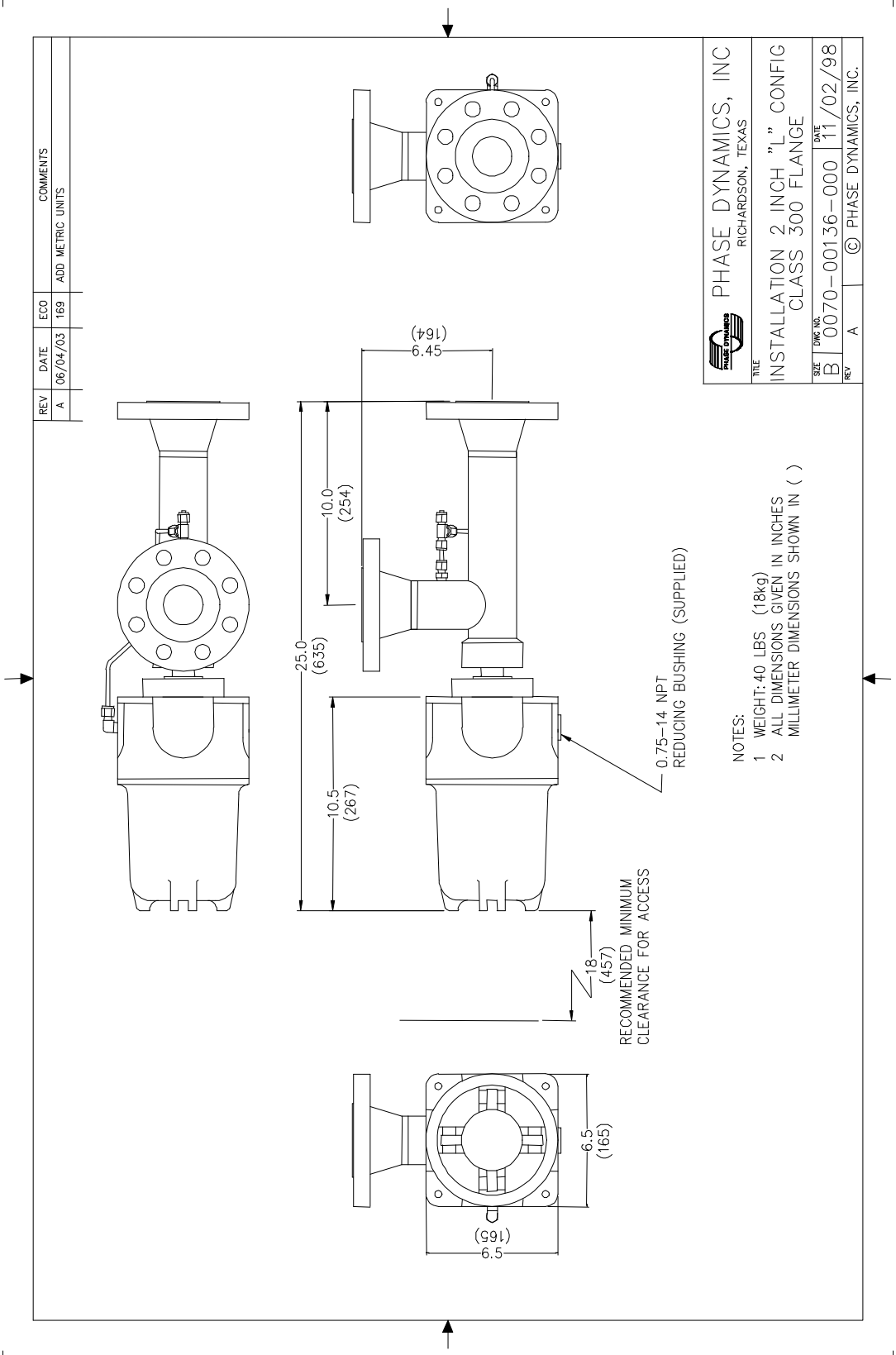
REV
DATE
ECO
COMMENTS
A
06/04/03
169
ADD METRIC UNITS
PHASE DYNAMICS, INC
RICHARDSON, TEXAS
TITLE
INSTALLATION 2 INCH "L" CONFIG
CLASS 300 FLANGE
SIZE
B
DWG NO.
0070-00136-000
DATE
11/02/98
REV
A
© PHASE DYNAMICS, INC.
(164)
6.45
10.0
(254)
25.0
(635)
10.5
(267)
0.75-14 NPT
REDUCING BUSHING (SUPPLIED)
18
(457)
RECOMMENDED MINIMUM
CLEARANCE FOR ACCESS
6.5
(165)
(165)
6.5
NOTES:
1 WEIGHT: 40 LBS (18kg)
2 ALL DIMENSIONS GIVEN IN INCHES
MILLIMETER DIMENSIONS SHOWN IN ( )

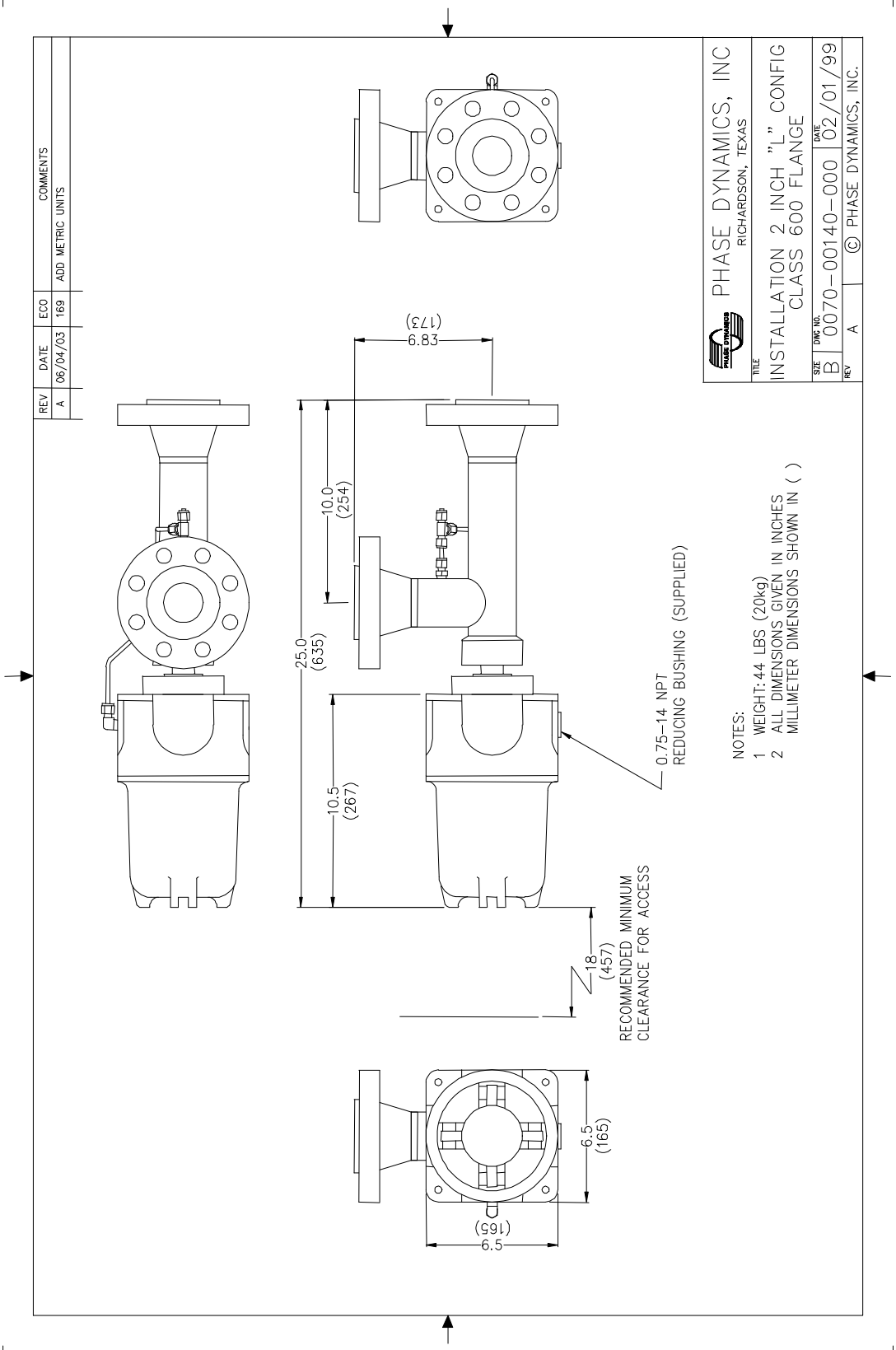
REV
DATE
ECO
COMMENTS
A
06/04/03
169
ADD METRIC UNITS
PHASE DYNAMICS, INC
RICHARDSON, TEXAS
TITLE
INSTALLATION 2 INCH "L" CONFIG
CLASS 600 FLANGE
SIZE
B
DWG NO.
0070-00140-000
DATE
02/01/99
REV
A
© PHASE DYNAMICS, INC.
6.83
(173)
10.0
(254)
25.0
(635)
10.5
(267)
0.75-14 NPT
REDUCING BUSHING (SUPPLIED)
18
(457)
RECOMMENDED MINIMUM
CLEARANCE FOR ACCESS
6.5
(165)
6.5
(165)
NOTES:
1 WEIGHT: 44 LBS (20kg)
2 ALL DIMENSIONS GIVEN IN INCHES
MILLIMETER DIMENSIONS SHOWN IN ( )

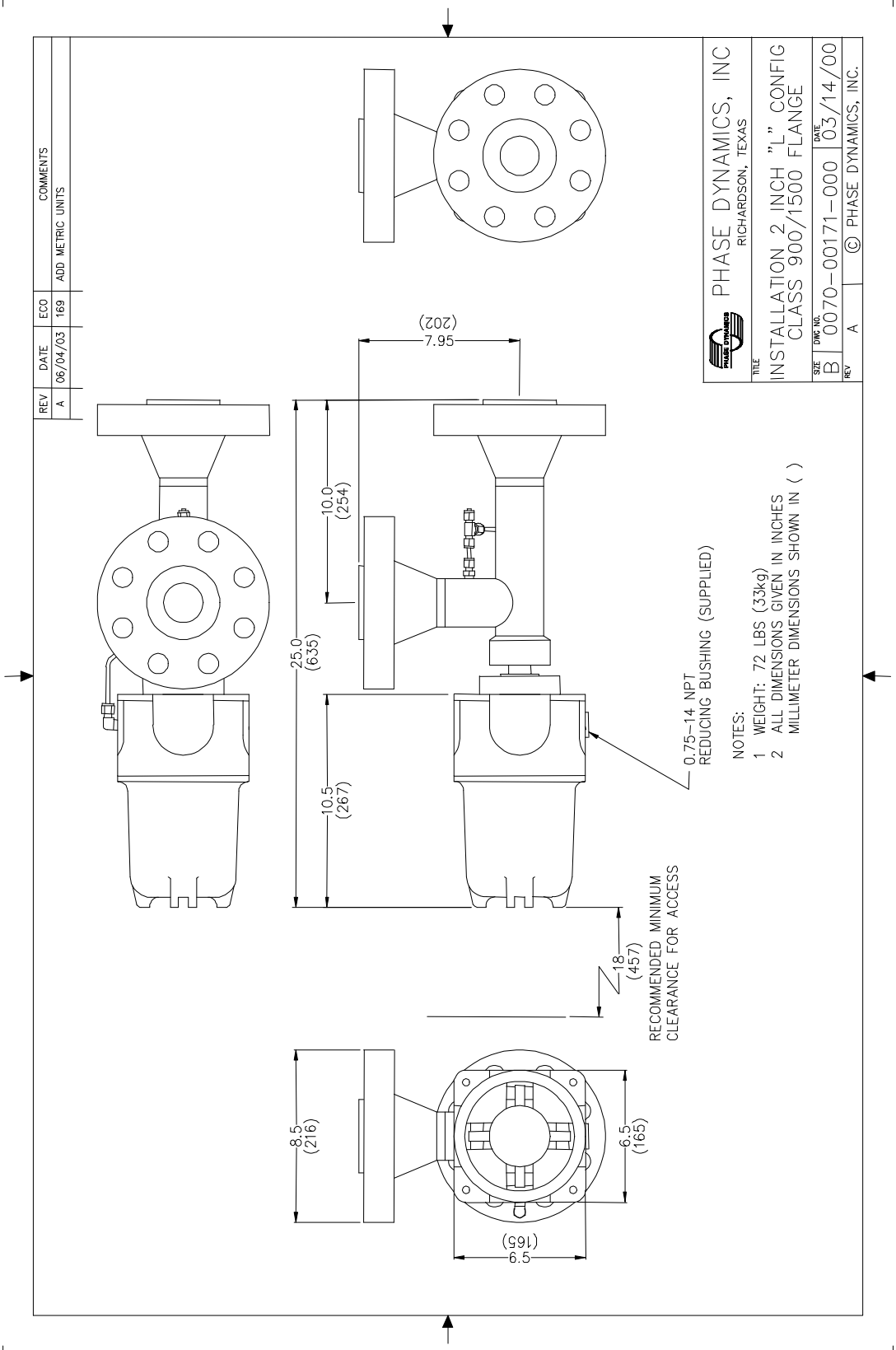
REV
DATE
ECO
COMMENTS
A
06/04/03
169
ADD METRIC UNITS
PHASE DYNAMICS, INC
RICHARDSON, TEXAS
TITLE
INSTALLATION 2 INCH "L" CONFIG
CLASS 900/1500 FLANGE
SIZE
B
DWG NO.
0070-00171-000
DATE
03/14/00
REV
A
© PHASE DYNAMICS, INC.
7.95
(202)
10.0
(254)
25.0
(635)
10.5
(267)
0.75-14 NPT
REDUCING BUSHING (SUPPLIED)
NOTES:
1 WEIGHT: 72 LBS (33kg)
2 ALL DIMENSIONS GIVEN IN INCHES
MILLIMETER DIMENSIONS SHOWN IN ( )
18
(457)
RECOMMENDED MINIMUM
CLEARANCE FOR ACCESS
8.5
(216)
6.5
(165)
6.5
(165)

REV	DATE	ECO	COMMENTS
A	11/09/99	137	ADD NOTES 2 ,3, 4
B	06/04/03	169	ADD METRIC UNITS

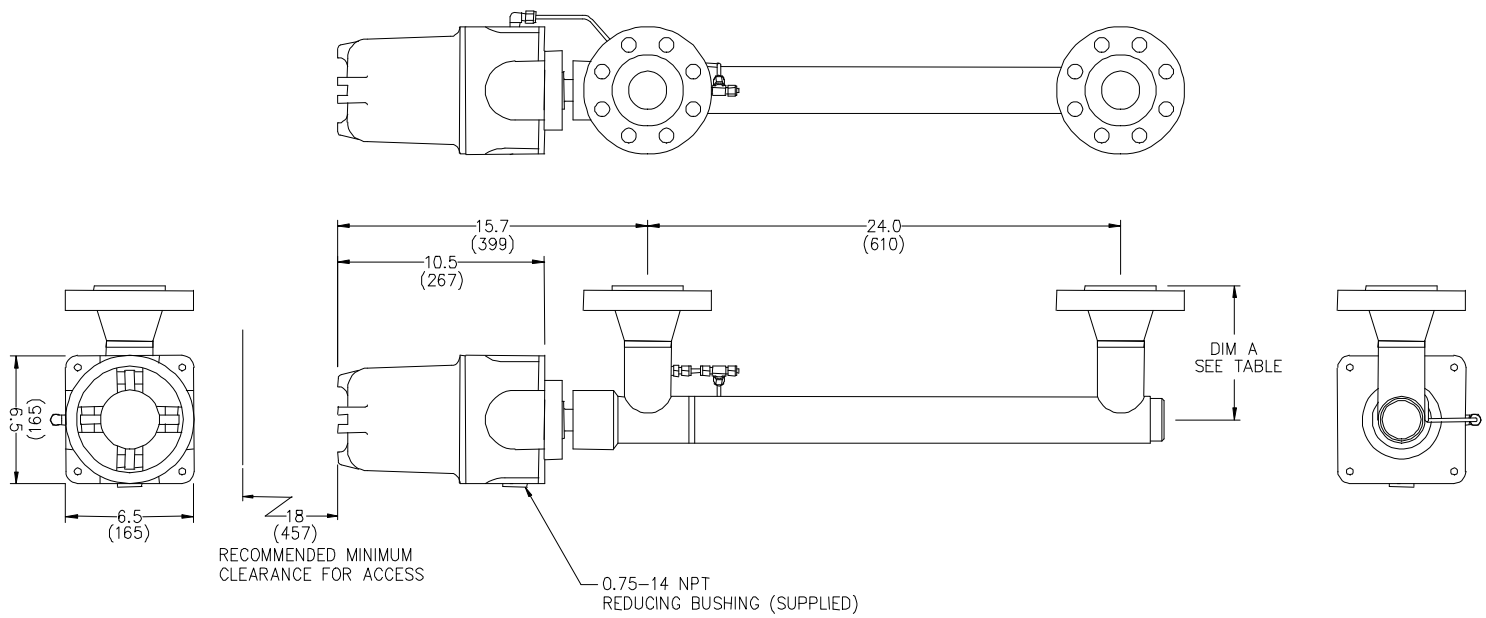

NOTES:
1 ALL DIMENSIONS GIVEN IN INCHES MILLIMETER DIMENSIONS SHOWN IN ( )
2 FLANGES ARE 2 INCH RAISED FACE SCHEDULE 80 BORE, 316L STAINLESS STEEL
3 PIPE IS 2 INCH, SCHEDULE 80, 316L STAINLESS STEEL
4 WEIGHT: SEE TABLE

FLANGE SIZE	DIMENSION "A"		WEIGHT (LBS)	(KG)
ANSI 150	6.2	(157)	46	21
ANSI 300	6.45	(164)	50	23
ANSI 600	6.83	(173)	54	25
ANSI 900	7.95	(202)	82	37
ANSI 1500	7.95	(202)	82	37

PHASE DYNAMICS, INC
RICHARDSON, TEXAS

TITLE
INSTALLATION, 2 INCH U CONFIG
RAISED FACE FLANGES

SIZE	DWG NO.	DATE
B	0070–00153–000	06/17/99

REV B

© PHASE DYNAMICS, INC.

REV	DATE	ECO	COMMENTS
A	06/04/03	169	ADD METRIC UNITS

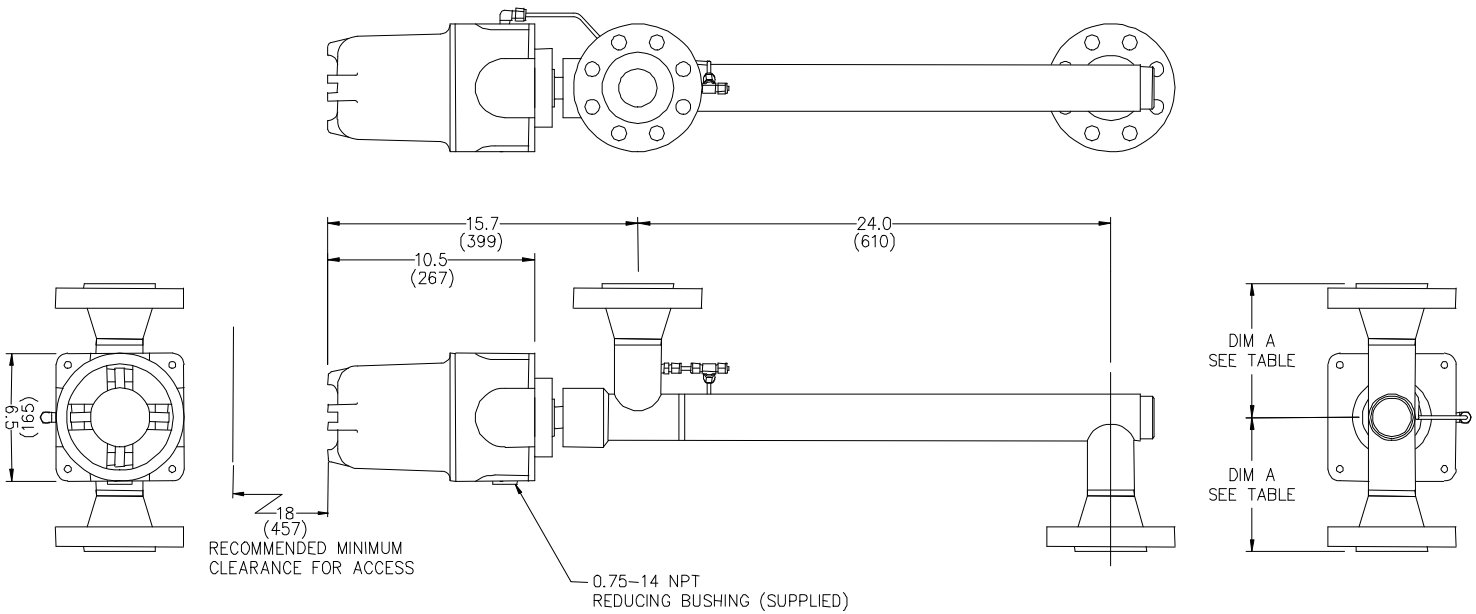

NOTES:
1 ALL DIMENSIONS GIVEN IN INCHES
MILLIMETER DIMENSIONS SHOWN IN ( )

FLANGE SIZE	DIMENSION "A"		WEIGHT (LBS)	(KG)
ANSI 150	6.2	(157)	46	21
ANSI 300	6.45	(164)	50	23
ANSI 600	6.83	(173)	54	25
ANSI 900	7.95	(202)	82	37
ANSI 1500	7.95	(202)	82	37

PHASE DYNAMICS, INC
RICHARDSON, TEXAS

TITLE
INSTALLATION, 2 INCH Z CONFIG
RAISED FACE FLANGES

SIZE	DWG NO.	DATE
B	0070–00154–000	07/15/99
REV A	© PHASE DYNAMICS, INC.	

REV	DATE	ECO	COMMENTS
A	06/04/03	169	ADD METRIC UNITS

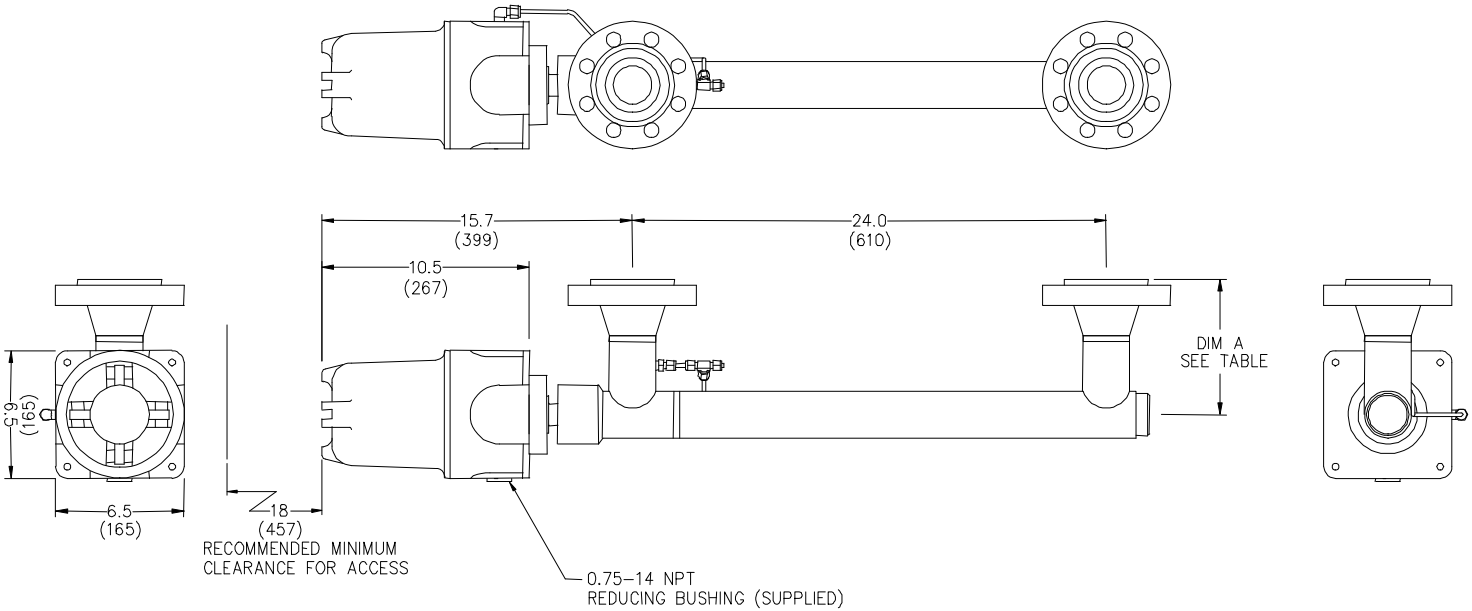

NOTES:
1 ALL DIMENSIONS GIVEN IN INCHES
MILLIMETER DIMENSIONS SHOWN IN ( )
2 FLANGES ARE 2 INCH RTJ TYPE
SCHEDULE 80 BORE, 316L STAINLESS STEEL
3 PIPE IS 2 INCH, SCHEDULE 80, 316L
STAINLESS STEEL
4 WEIGHT: SEE TABLE

FLANGE SIZE	DIMENSION "A"		WEIGHT (LBS)	(KG)
ANSI 300 RTJ	6.5	(165)	50	23
ANSI 600 RTJ	6.9	(175)	54	25
ANSI 900 RTJ	8.0	(203)	82	37
ANSI 1500 RTJ	8.0	(203)	82	37

PHASE DYNAMICS, INC
RICHARDSON, TEXAS

TITLE
INSTALLATION, 2 INCH U CONFIG
RTJ FLANGES

SIZE	DWG NO.	DATE
B	0070–00201–000	12/20/01
REV A	© PHASE DYNAMICS, INC.	

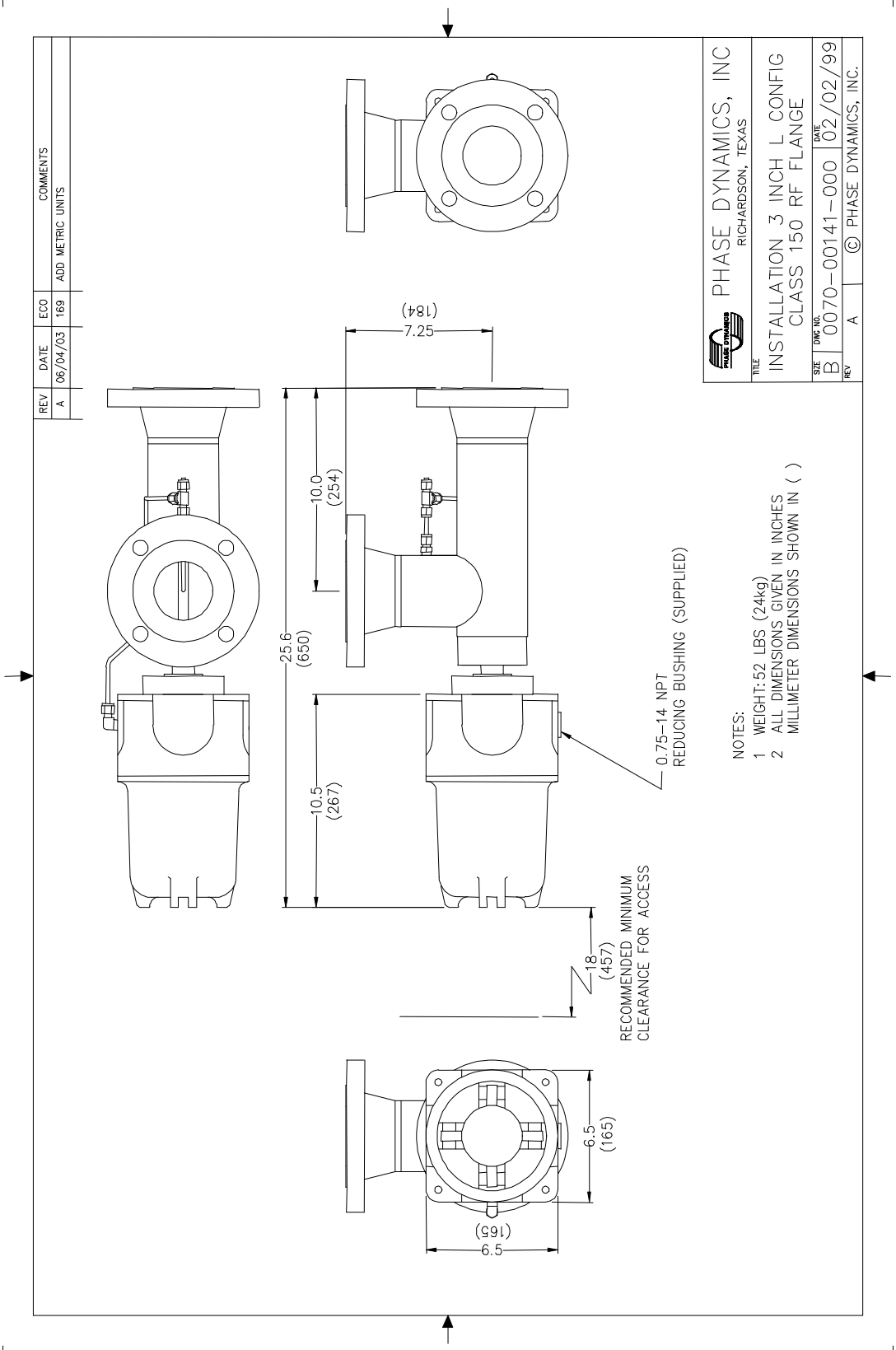
REV
DATE
ECO
COMMENTS
A
06/04/03
169
ADD METRIC UNITS
PHASE DYNAMICS, INC
RICHARDSON, TEXAS
TITLE
INSTALLATION 3 INCH L CONFIG
CLASS 150 RF FLANGE
SIZE
B
DWG NO.
0070-00141-000
DATE
02/02/99
REV
A
© PHASE DYNAMICS, INC.
7.25
(184)
10.0
(254)
25.6
(650)
10.5
(267)
0.75-14 NPT
REDUCING BUSHING (SUPPLIED)
18
(457)
RECOMMENDED MINIMUM
CLEARANCE FOR ACCESS
6.5
(165)
6.5
(165)
NOTES:
1 WEIGHT: 52 LBS (24kg)
2 ALL DIMENSIONS GIVEN IN INCHES
MILLIMETER DIMENSIONS SHOWN IN ( )

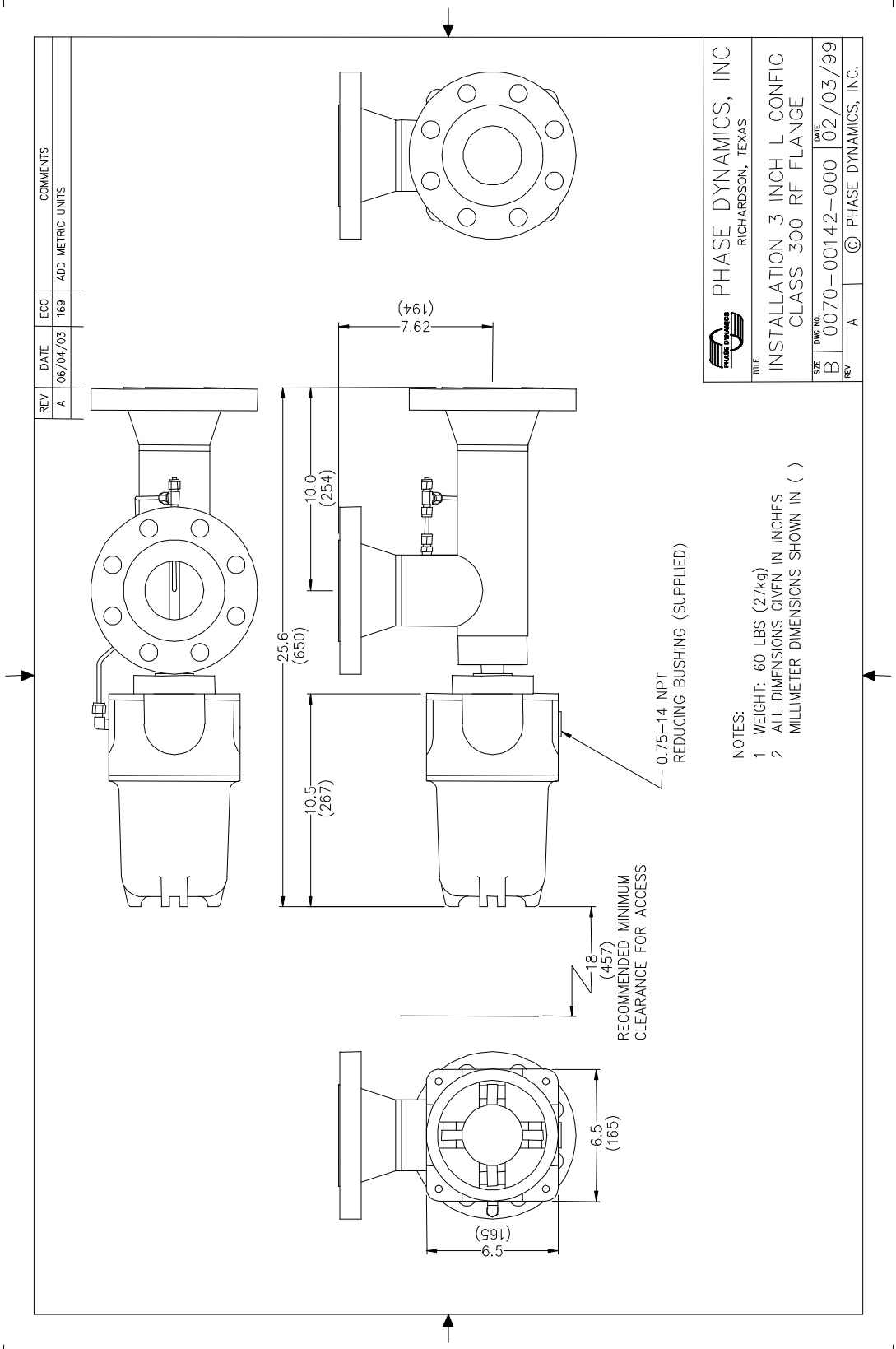
REV
DATE
ECO
COMMENTS
A
06/04/03
169
ADD METRIC UNITS
PHASE DYNAMICS, INC
RICHARDSON, TEXAS
TITLE
INSTALLATION 3 INCH L CONFIG
CLASS 300 RF FLANGE
SIZE
B
DWG NO.
0070-00142-000
DATE
02/03/99
REV
A
© PHASE DYNAMICS, INC.
7.62
(194)
10.0
(254)
25.6
(650)
10.5
(267)
0.75-14 NPT
REDUCING BUSHING (SUPPLIED)
18
(457)
RECOMMENDED MINIMUM
CLEARANCE FOR ACCESS
6.5
(165)
6.5
(165)
NOTES:
1 WEIGHT: 60 LBS (27kg)
2 ALL DIMENSIONS GIVEN IN INCHES
MILLIMETER DIMENSIONS SHOWN IN ( )

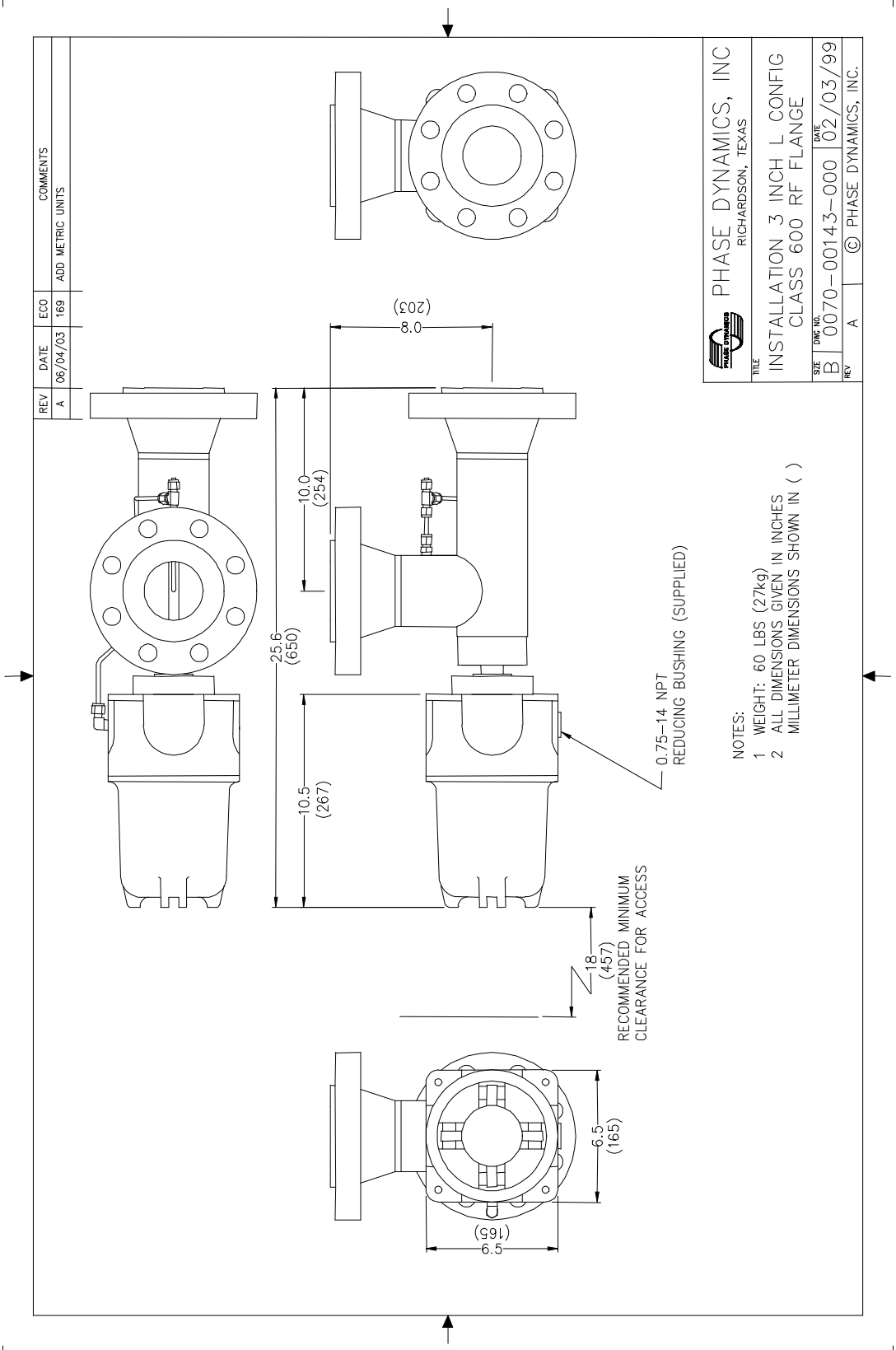
REV
DATE
ECO
COMMENTS
A
06/04/03
169
ADD METRIC UNITS
PHASE DYNAMICS, INC
RICHARDSON, TEXAS
TITLE
INSTALLATION 3 INCH L CONFIG
CLASS 600 RF FLANGE
SIZE
B
DWG NO.
0070-00143-000
DATE
02/03/99
REV
A
© PHASE DYNAMICS, INC.
8.0
(203)
10.0
(254)
25.6
(650)
10.5
(267)
0.75-14 NPT
REDUCING BUSHING (SUPPLIED)
18
(457)
RECOMMENDED MINIMUM
CLEARANCE FOR ACCESS
6.5
(165)
6.5
(165)
NOTES:
1 WEIGHT: 60 LBS (27kg)
2 ALL DIMENSIONS GIVEN IN INCHES
MILLIMETER DIMENSIONS SHOWN IN ( )

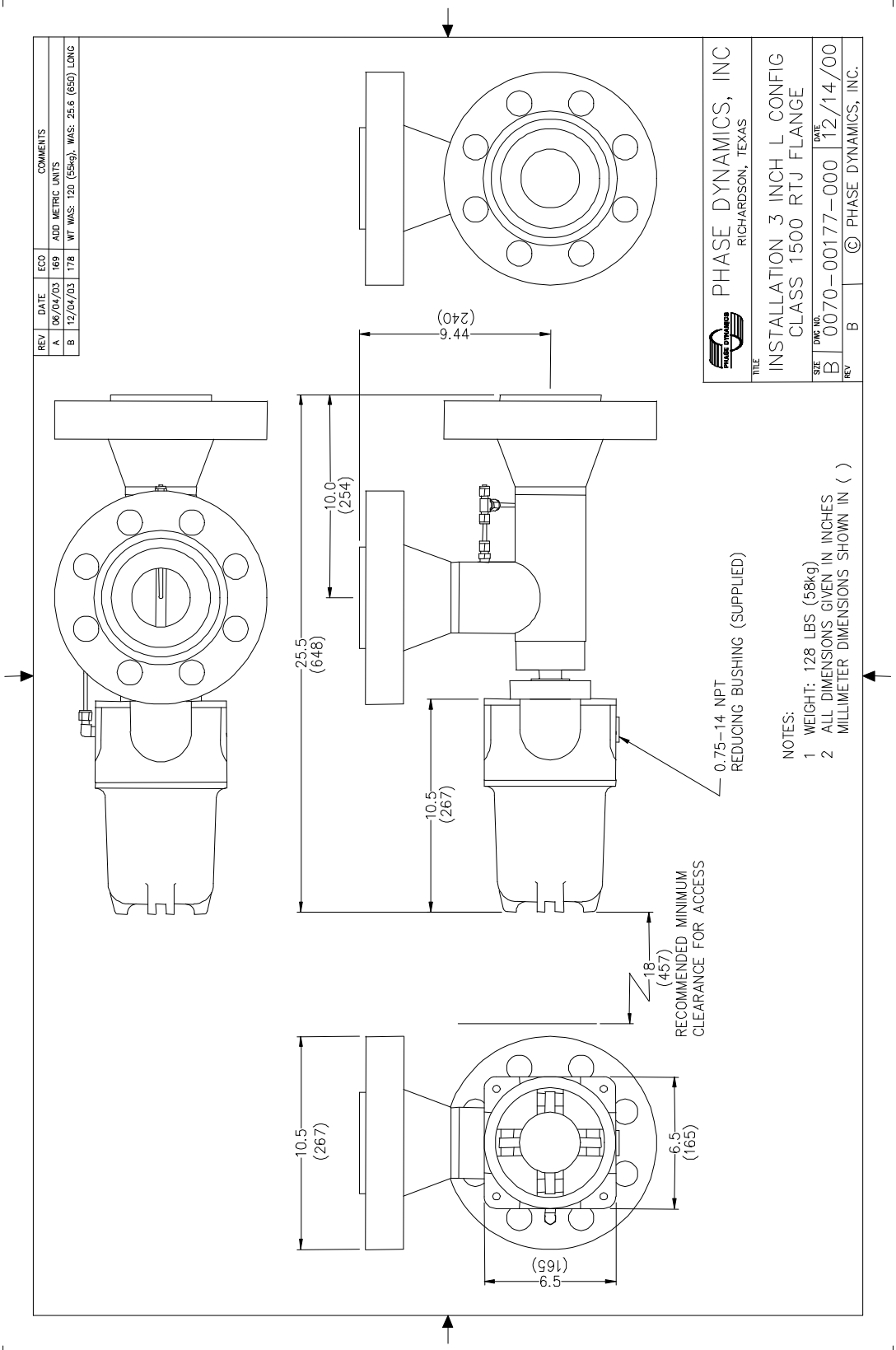
REV
DATE
ECO
COMMENTS
A
06/04/03
169
ADD METRIC UNITS
B
12/04/03
178
WT WAS: 120 (55kg), WAS: 25.6 (650) LONG
PHASE DYNAMICS, INC
RICHARDSON, TEXAS
TITLE
INSTALLATION 3 INCH L CONFIG
CLASS 1500 RTJ FLANGE
SIZE
B
DWG NO.
0070-00177-000
DATE
12/14/00
REV
B
© PHASE DYNAMICS, INC.
9.44
(240)
10.0
(254)
25.5
(648)
10.5
(267)
0.75-14 NPT
REDUCING BUSHING (SUPPLIED)
18
(457)
RECOMMENDED MINIMUM
CLEARANCE FOR ACCESS
10.5
(267)
6.5
(165)
6.5
(165)
NOTES:
1 WEIGHT: 128 LBS (58kg)
2 ALL DIMENSIONS GIVEN IN INCHES
MILLIMETER DIMENSIONS SHOWN IN ( )

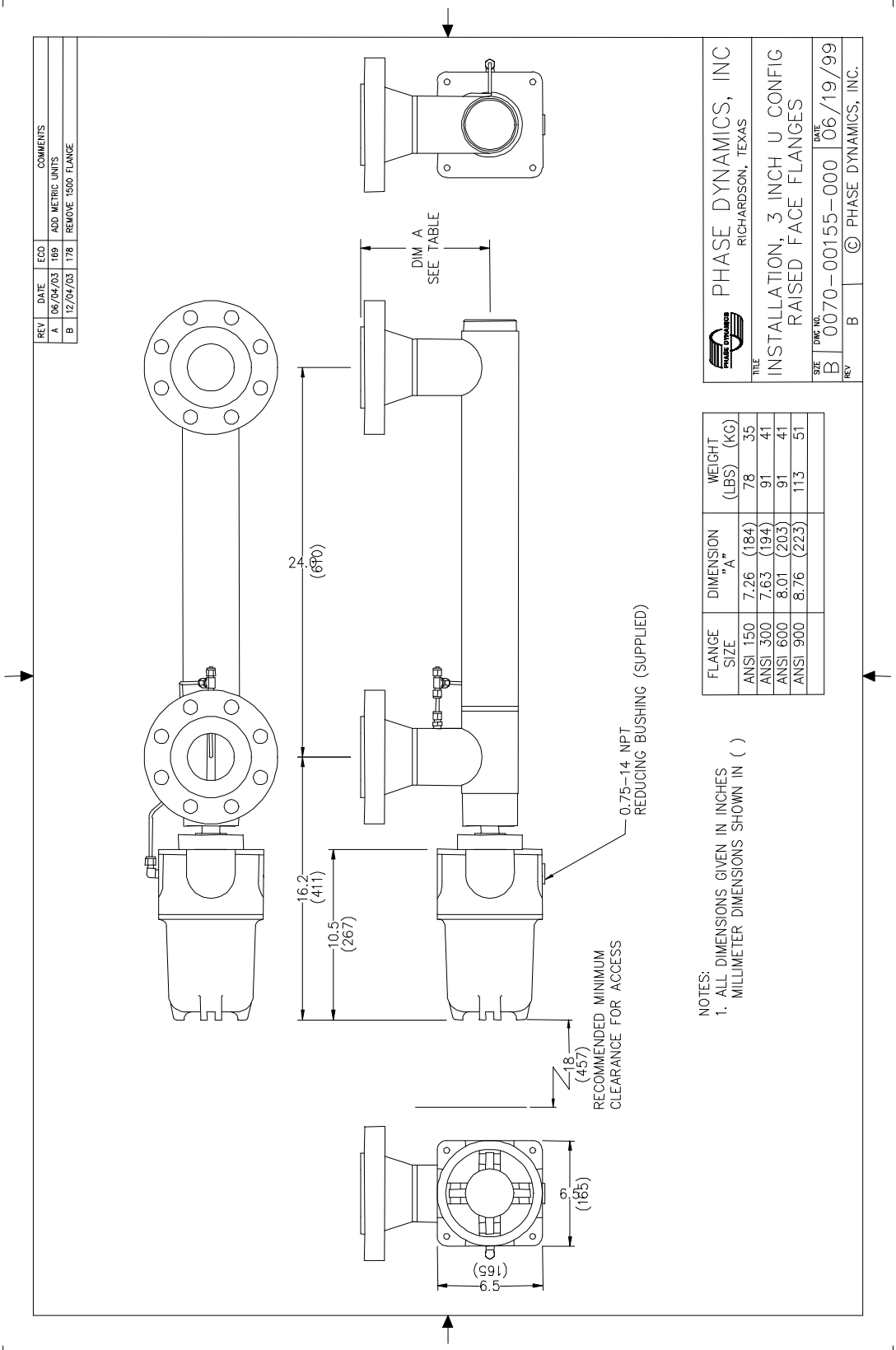
REV | DATE | ECO | COMMENTS
A | 06/04/03 | 169 | ADD METRIC UNITS
B | 12/04/03 | 178 | REMOVE 1500 FLANGE
DIM A
SEE TABLE
24.0
(610)
16.2
(411)
10.5
(267)
0.75-14 NPT
REDUCING BUSHING (SUPPLIED)
18
(457)
RECOMMENDED MINIMUM
CLEARANCE FOR ACCESS
6.5
(165)
6.5
(165)
PHASE DYNAMICS, INC
RICHARDSON, TEXAS
TITLE
INSTALLATION, 3 INCH U CONFIG
RAISED FACE FLANGES
SIZE B
DWG NO. 0070-00155-000
DATE 06/19/99
REV B
© PHASE DYNAMICS, INC.
FLANGE SIZE | DIMENSION "A" | WEIGHT (LBS) (KG)
ANSI 150 | 7.26 (184) | 78 35
ANSI 300 | 7.63 (194) | 91 41
ANSI 600 | 8.01 (203) | 91 41
ANSI 900 | 8.76 (223) | 113 51
NOTES:
1. ALL DIMENSIONS GIVEN IN INCHES
MILLIMETER DIMENSIONS SHOWN IN ( )

REV	DATE	ECO	COMMENTS
A	06/04/03	169	ADD METRIC UNITS
B	12/04/03	178	REMOVE 1500 FLANGE

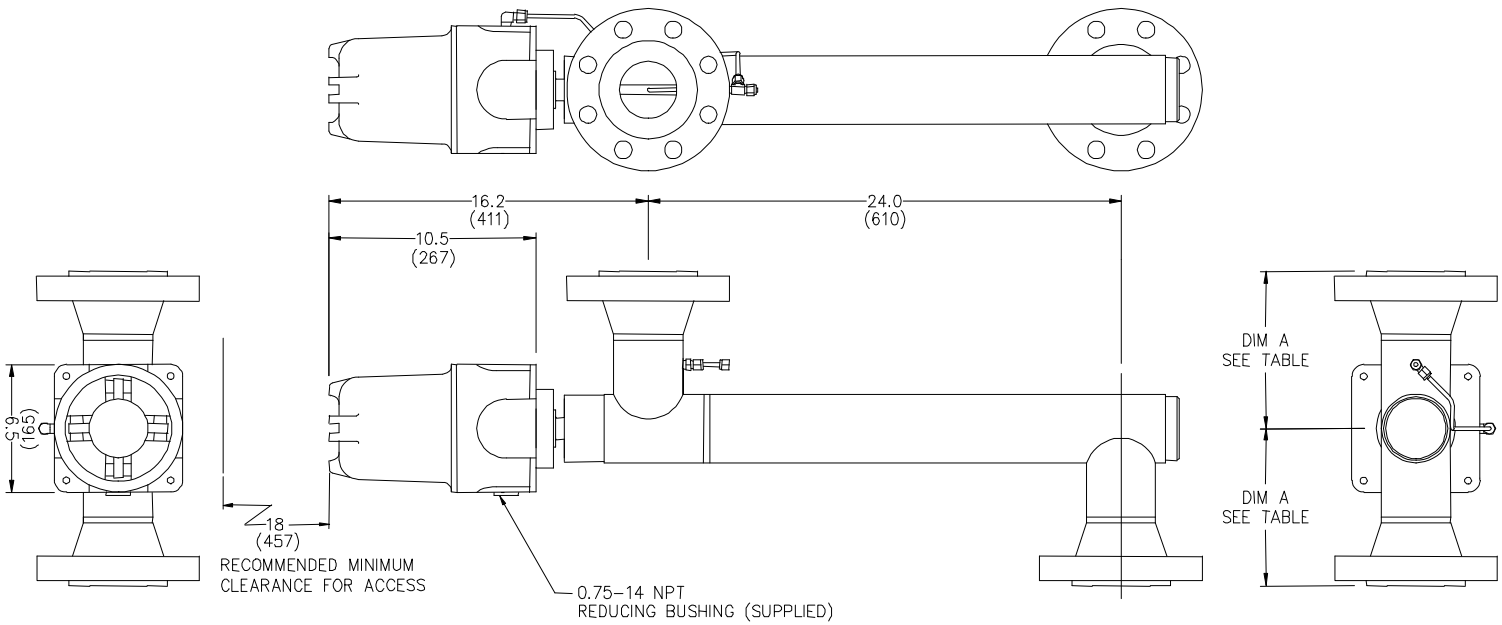

NOTES:
1. ALL DIMENSIONS GIVEN IN INCHES
   MILLIMETER DIMENSIONS SHOWN IN ( )

FLANGE SIZE	DIMENSION "A"	WEIGHT (LBS)	(KG)
ANSI 150	7.26 (184)	78	35
ANSI 300	7.63 (194)	91	41
ANSI 600	8.01 (203)	91	41
ANSI 900	8.76 (223)	113	51

PHASE DYNAMICS, INC
RICHARDSON, TEXAS

TITLE
INSTALLATION, 3 INCH Z CONFIG
RAISED FACE FLANGES

SIZE	DWG NO.	DATE
B	0070-00156-000	07/16/99
REV B	© PHASE DYNAMICS, INC.	

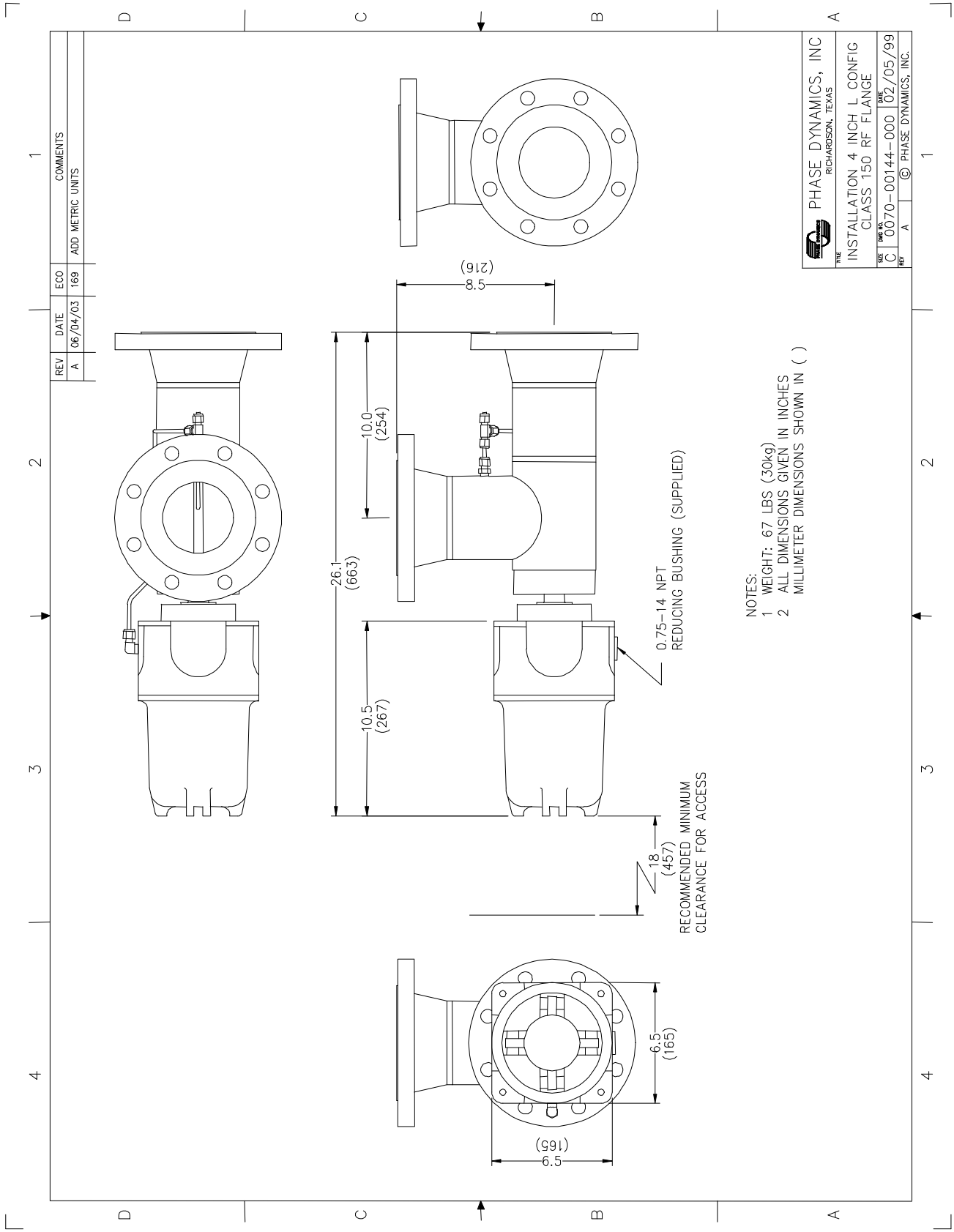
REV
DATE
ECO
COMMENTS
A
06/04/03
169
ADD METRIC UNITS
PHASE DYNAMICS, INC
RICHARDSON, TEXAS
TITLE
INSTALLATION 4 INCH L CONFIG
CLASS 150 RF FLANGE
SIZE
C
DWG NO.
0070-00144-000
DATE
02/05/99
REV
A
© PHASE DYNAMICS, INC.
8.5
(216)
10.0
(254)
26.1
(663)
10.5
(267)
0.75-14 NPT
REDUCING BUSHING (SUPPLIED)
18
(457)
RECOMMENDED MINIMUM
CLEARANCE FOR ACCESS
6.5
(165)
6.5
(165)
NOTES:
1 WEIGHT: 67 LBS (30kg)
2 ALL DIMENSIONS GIVEN IN INCHES
MILLIMETER DIMENSIONS SHOWN IN ( )

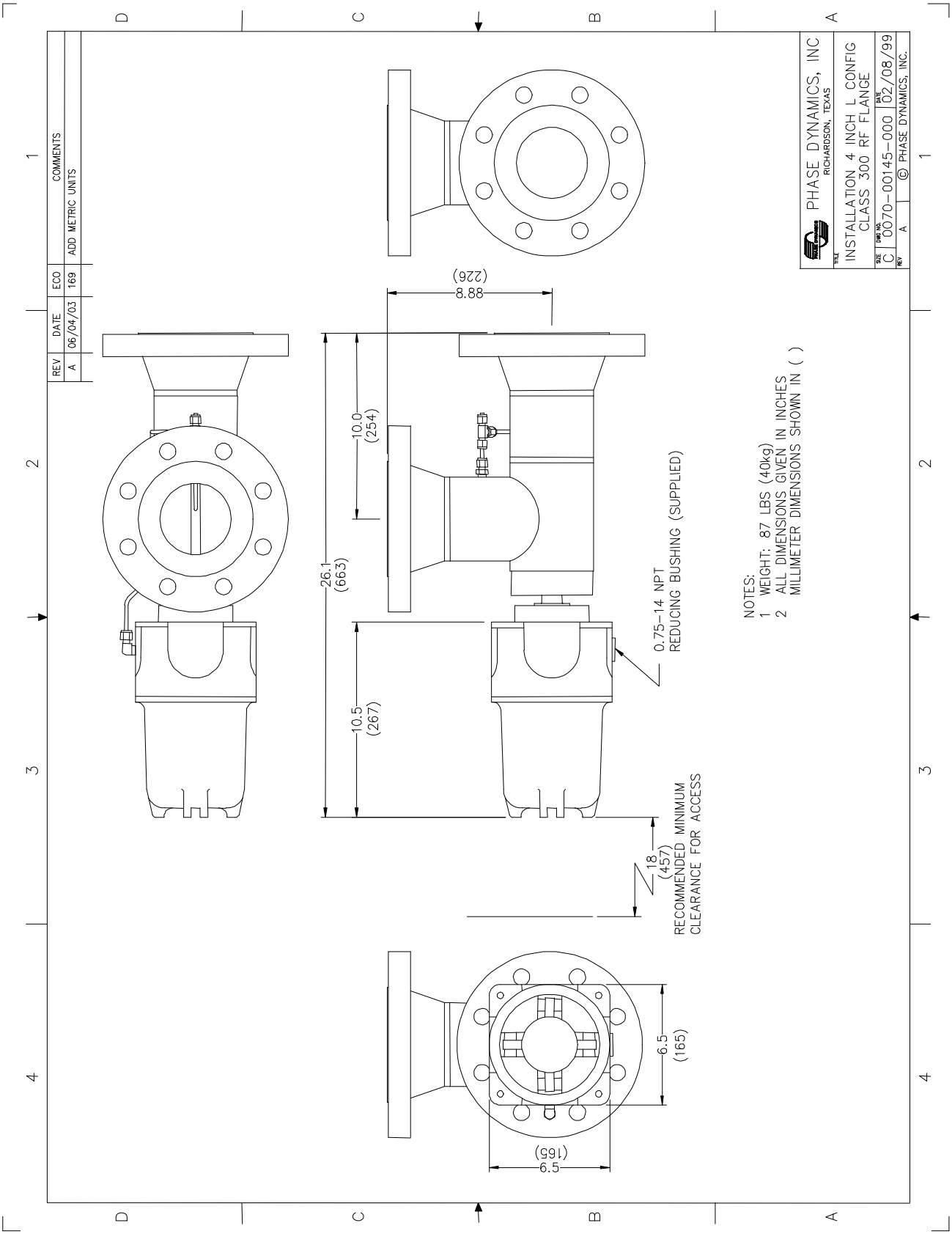
PHASE DYNAMICS, INC
RICHARDSON, TEXAS
TITLE
INSTALLATION 4 INCH L CONFIG
CLASS 300 RF FLANGE
SIZE C
DWG NO. 0070-00145-000
DATE 02/08/99
REV A
© PHASE DYNAMICS, INC.
REV DATE ECO COMMENTS
A 06/04/03 169 ADD METRIC UNITS
8.88
(226)
10.0
(254)
26.1
(663)
10.5
(267)
0.75-14 NPT
REDUCING BUSHING (SUPPLIED)
18
(457)
RECOMMENDED MINIMUM
CLEARANCE FOR ACCESS
6.5
(165)
6.5
(165)
NOTES:
1 WEIGHT: 87 LBS (40kg)
2 ALL DIMENSIONS GIVEN IN INCHES
MILLIMETER DIMENSIONS SHOWN IN ( )

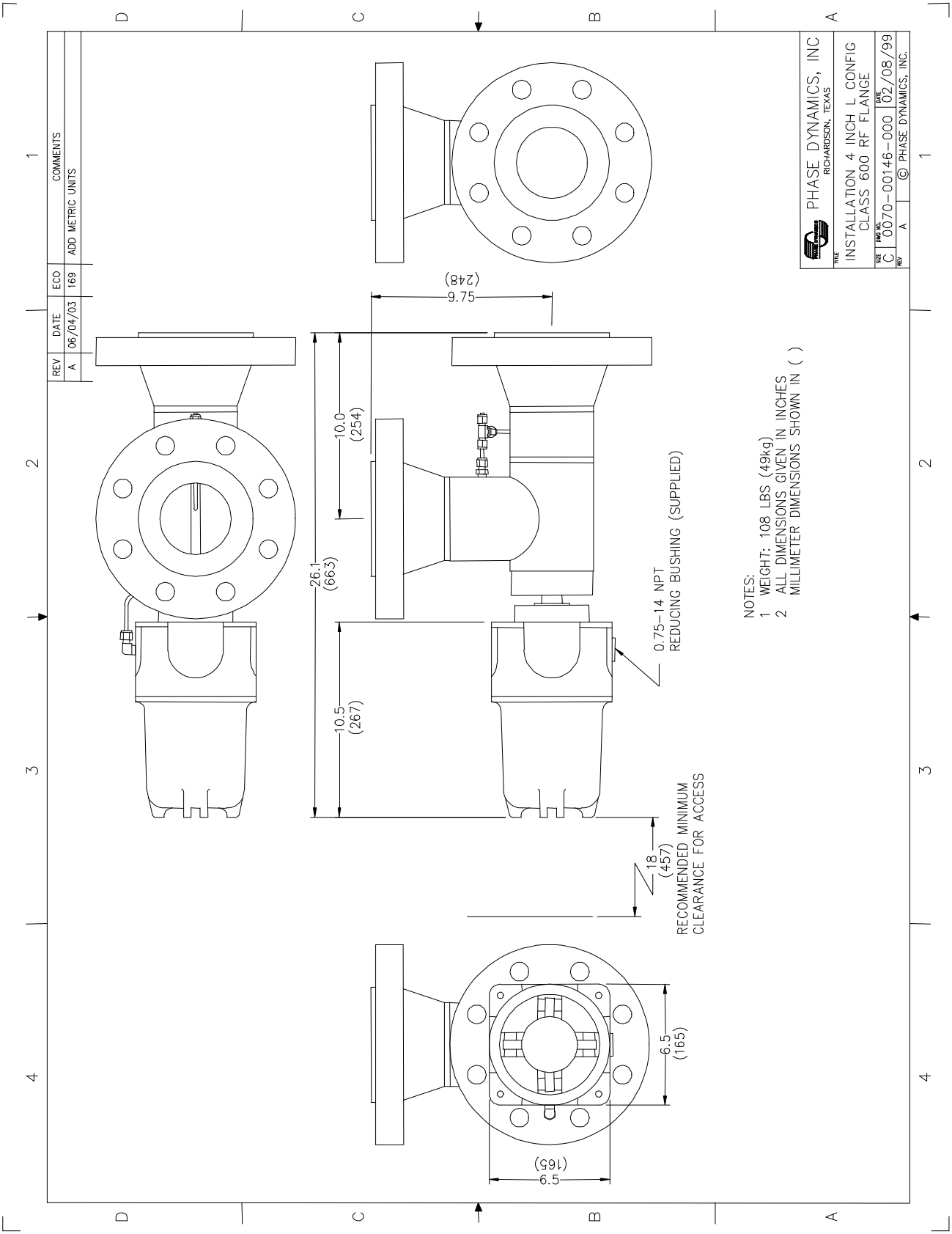
PHASE DYNAMICS, INC
RICHARDSON, TEXAS
TITLE
INSTALLATION 4 INCH L CONFIG
CLASS 600 RF FLANGE
SIZE C
DWG NO. 0070-00146-000
DATE 02/08/99
REV A
© PHASE DYNAMICS, INC.
REV DATE ECO COMMENTS
A 06/04/03 169 ADD METRIC UNITS
9.75
(248)
10.0
(254)
26.1
(663)
10.5
(267)
0.75-14 NPT
REDUCING BUSHING (SUPPLIED)
18
(457)
RECOMMENDED MINIMUM
CLEARANCE FOR ACCESS
6.5
(165)
6.5
(165)
NOTES:
1 WEIGHT: 108 LBS (49kg)
2 ALL DIMENSIONS GIVEN IN INCHES
MILLIMETER DIMENSIONS SHOWN IN ( )

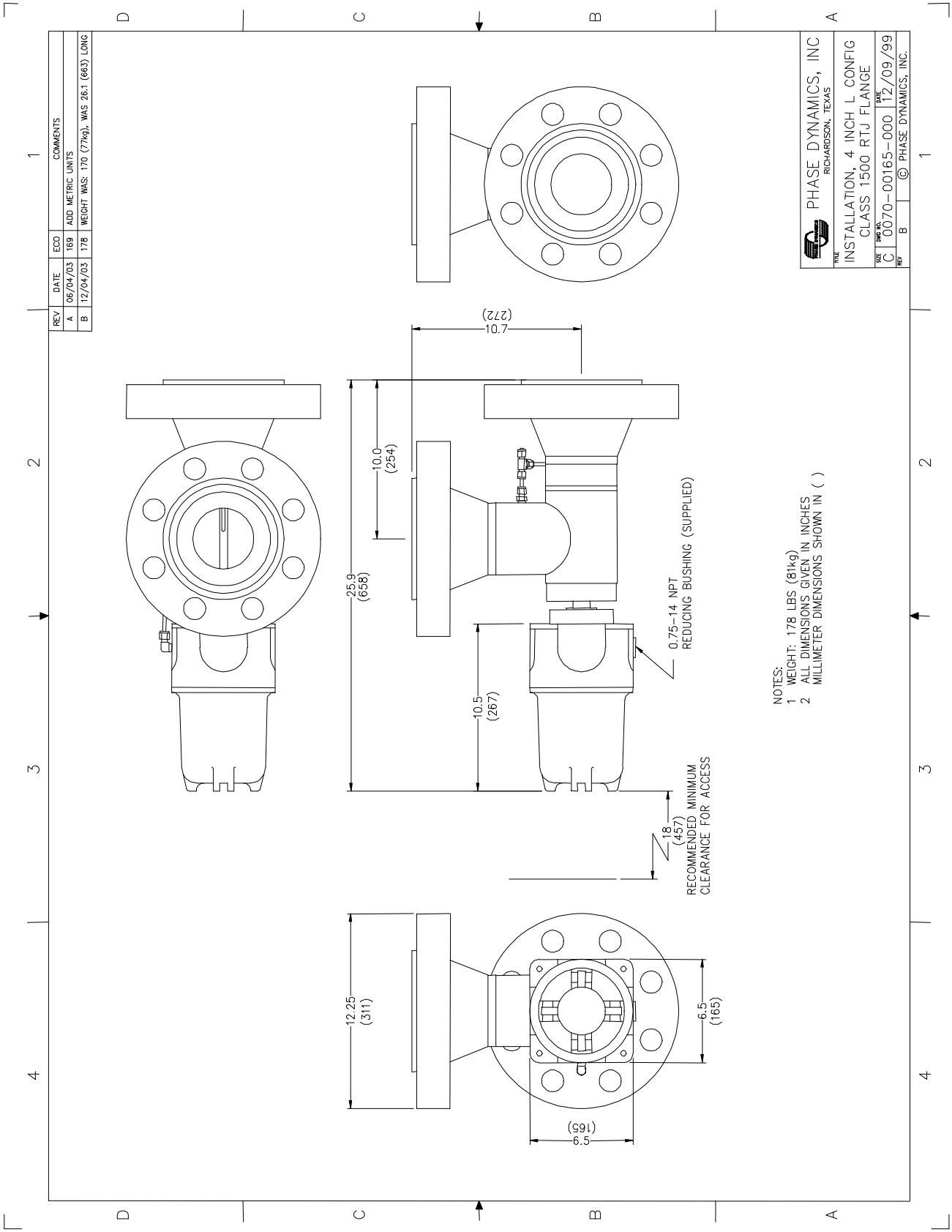
REV DATE ECO COMMENTS
A 06/04/03 169 ADD METRIC UNITS
B 12/04/03 178 WEIGHT WAS: 170 (77kg), WAS 26.1 (663) LONG
PHASE DYNAMICS, INC
RICHARDSON, TEXAS
TITLE
INSTALLATION, 4 INCH L CONFIG
CLASS 1500 RTJ FLANGE
SIZE C DWG NO. 0070-00165-000 DATE 12/09/99
REV B © PHASE DYNAMICS, INC.
10.7
(272)
10.0
(254)
25.9
(658)
10.5
(267)
0.75-14 NPT
REDUCING BUSHING (SUPPLIED)
18
(457)
RECOMMENDED MINIMUM
CLEARANCE FOR ACCESS
12.25
(311)
6.5
(165)
6.5
(165)
NOTES:
1 WEIGHT: 178 LBS (81kg)
2 ALL DIMENSIONS GIVEN IN INCHES
MILLIMETER DIMENSIONS SHOWN IN ( )

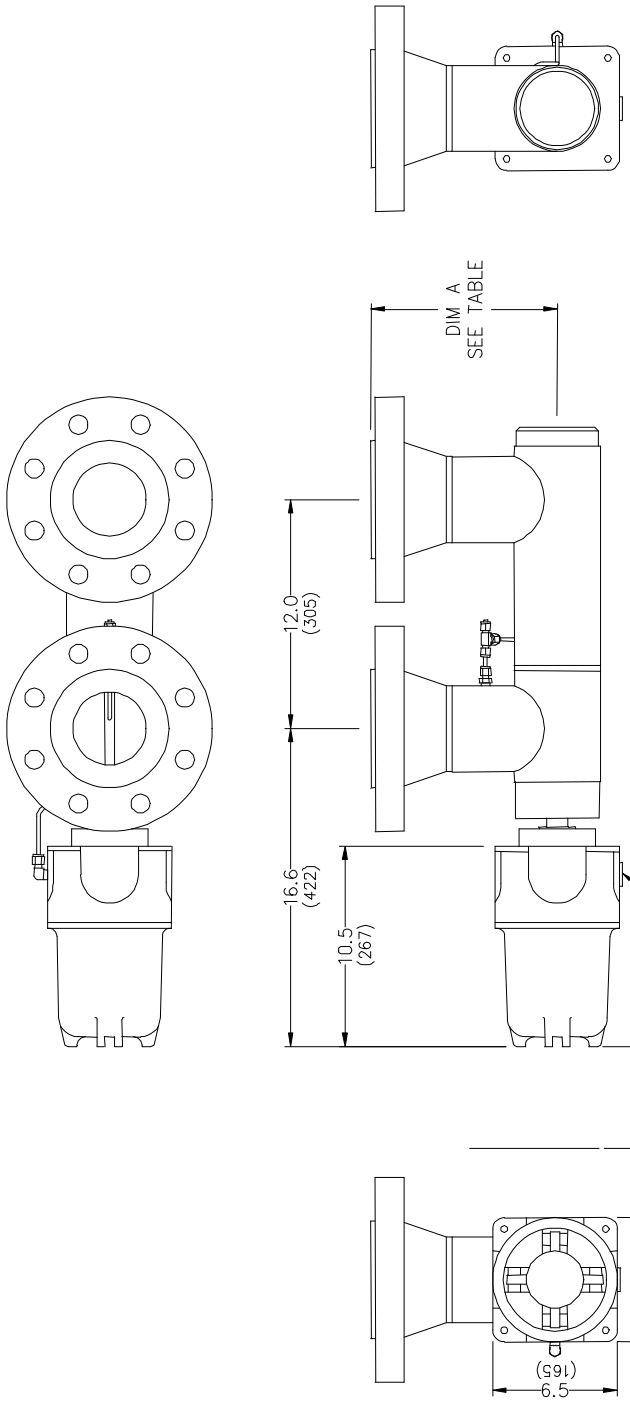

FLANGE SIZE	DIMENSION "A"	WEIGHT (LBS) (KG)
ANSI 150	8.50 (216)	89 40
ANSI 300	8.88 (226)	109 50
ANSI 600	9.75 (248)	130 59
ANSI 900	10.25 (260)	158 72

NOTES:
1. ALL DIMENSIONS GIVEN IN INCHES
MILLIMETER DIMENSIONS SHOWN IN ( )

REV	DATE	ECO	COMMENTS
A	06/04/03	169	ADD METRIC UNITS

PHASE DYNAMICS, INC
RICHARDSON, TEXAS

TITLE
INSTALLATION, 4 INCH U CONFIG
RAISED FACE FLANGES

SIZE C | DWG NO. 0070-00157-000 | DATE 06/20/99
REV A | © PHASE DYNAMICS, INC.

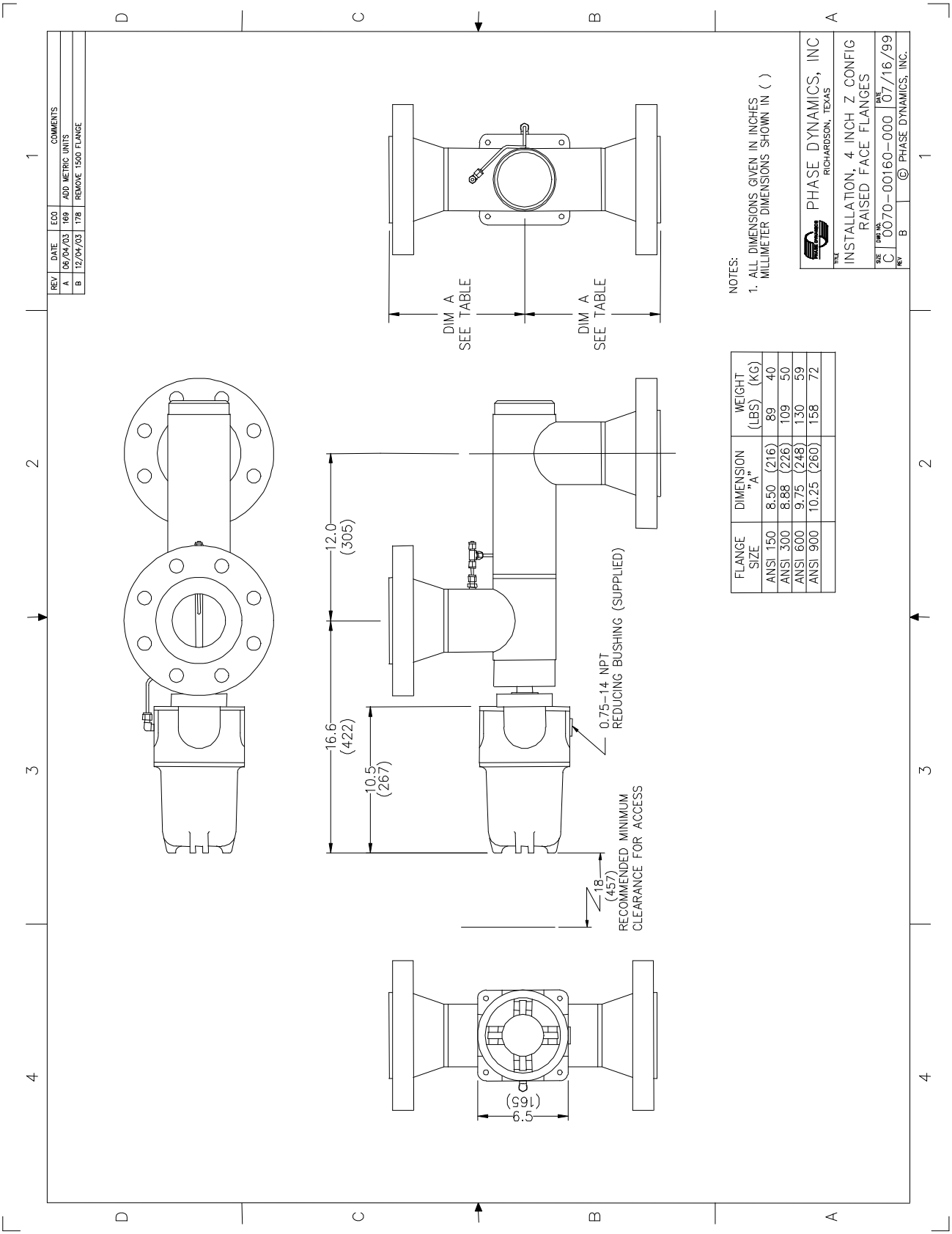
REV | DATE | ECO | COMMENTS
A | 06/04/03 | 169 | ADD METRIC UNITS
B | 12/04/03 | 178 | REMOVE 1500 FLANGE
DIM A SEE TABLE
DIM A SEE TABLE
12.0 (305)
16.6 (422)
10.5 (267)
0.75-14 NPT REDUCING BUSHING (SUPPLIED)
18 (457) RECOMMENDED MINIMUM CLEARANCE FOR ACCESS
6.5 (165)
NOTES:
1. ALL DIMENSIONS GIVEN IN INCHES MILLIMETER DIMENSIONS SHOWN IN ( )
FLANGE SIZE | DIMENSION "A" | WEIGHT (LBS) (KG)
ANSI 150 | 8.50 (216) | 89 40
ANSI 300 | 8.88 (226) | 109 50
ANSI 600 | 9.75 (248) | 130 59
ANSI 900 | 10.25 (260) | 158 72
PHASE DYNAMICS, INC
RICHARDSON, TEXAS
TITLE
INSTALLATION, 4 INCH Z CONFIG RAISED FACE FLANGES
SIZE C
DWG NO. 0070-00160-000
DATE 07/16/99
REV B
© PHASE DYNAMICS, INC.

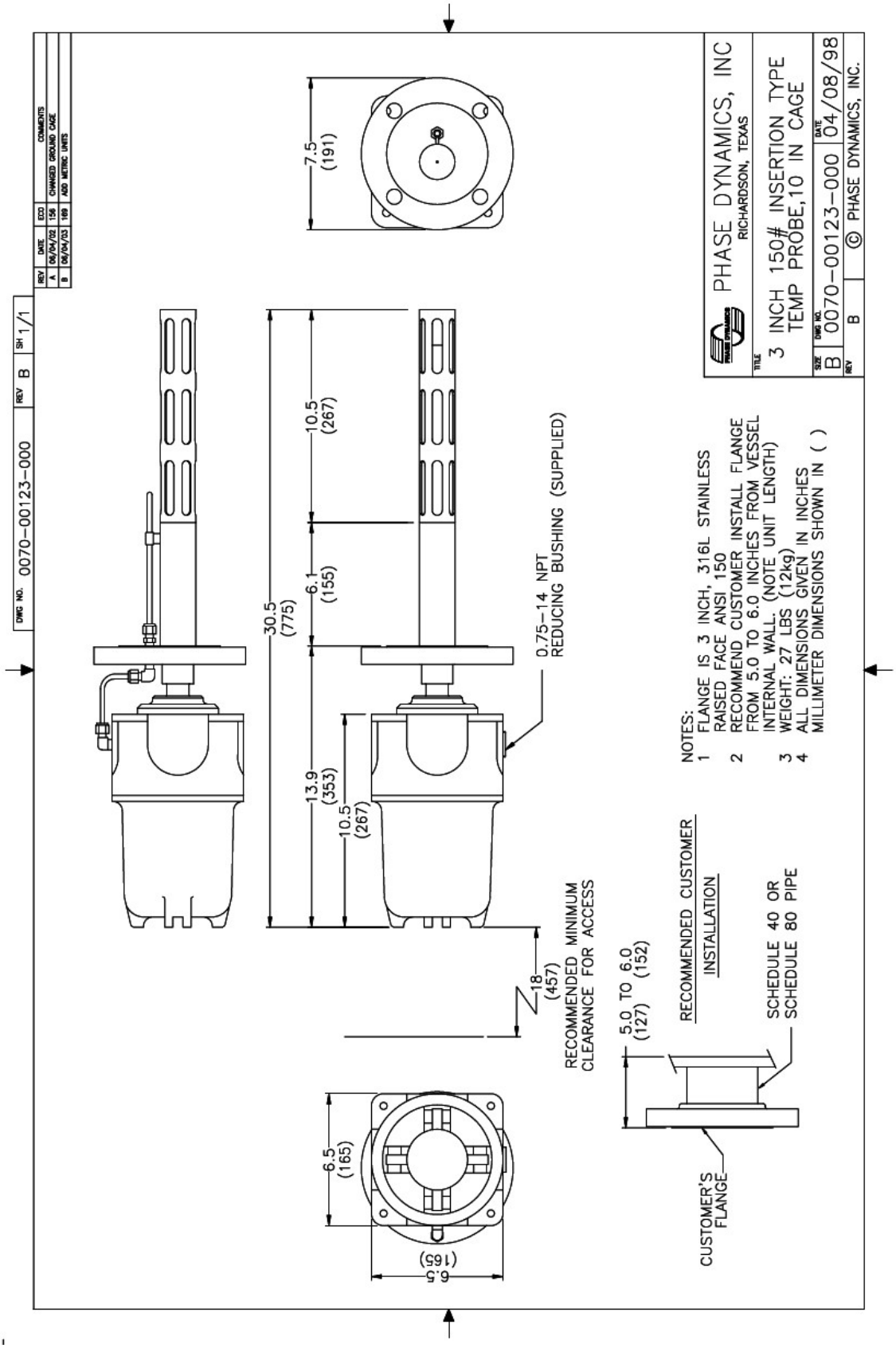
DWG NO. 0070-00123-000
REV B
SH 1/1
REV DATE ECO COMMENTS
A 06/04/02 156 CHANGED GROUND CAGE
B 06/04/03 169 ADD METRIC UNITS
7.5 (191)
30.5 (775)
10.5 (267)
6.1 (155)
13.9 (353)
10.5 (267)
0.75-14 NPT REDUCING BUSHING (SUPPLIED)
18 (457)
RECOMMENDED MINIMUM CLEARANCE FOR ACCESS
6.5 (165)
6.5 (165)
5.0 TO 6.0 (127) (152)
RECOMMENDED CUSTOMER INSTALLATION
SCHEDULE 40 OR SCHEDULE 80 PIPE
CUSTOMER'S FLANGE
NOTES:
1 FLANGE IS 3 INCH, 316L STAINLESS RAISED FACE ANSI 150
2 RECOMMEND CUSTOMER INSTALL FLANGE FROM 5.0 TO 6.0 INCHES FROM VESSEL INTERNAL WALL. (NOTE UNIT LENGTH)
3 WEIGHT: 27 LBS (12kg)
4 ALL DIMENSIONS GIVEN IN INCHES MILLIMETER DIMENSIONS SHOWN IN ( )
PHASE DYNAMICS, INC
RICHARDSON, TEXAS
TITLE
3 INCH 150# INSERTION TYPE TEMP PROBE,10 IN CAGE
SIZE B
DWG NO. 0070-00123-000
DATE 04/08/98
REV B
© PHASE DYNAMICS, INC.

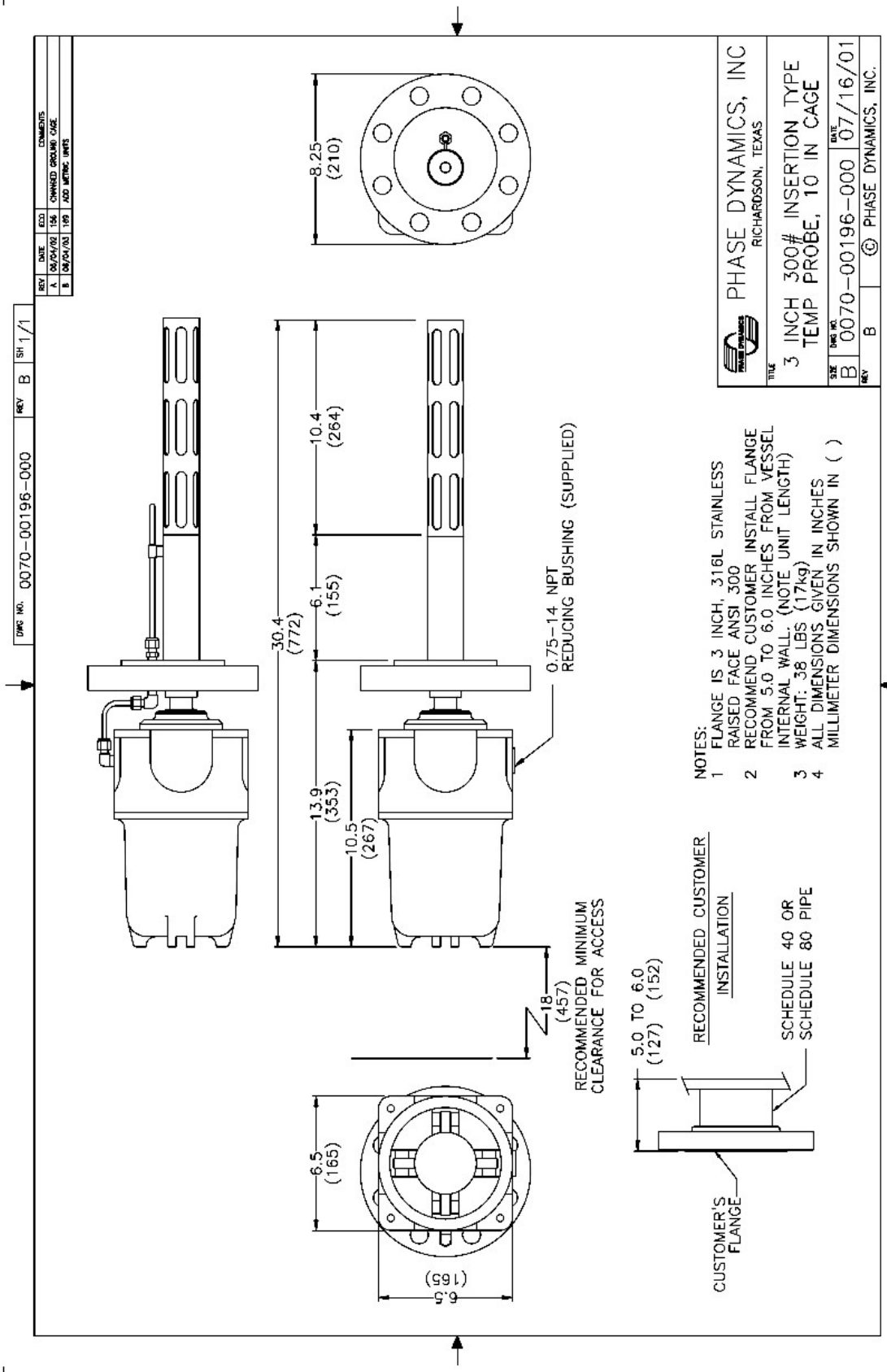
DWG NO. 0070-00196-000
REV B
SH 1/1
REV DATE ECO COMMENTS
A 06/04/02 156 CHANGED GROUND CASE
B 06/04/03 169 ADD METRIC UNITS
8.25 (210)
10.4 (264)
6.1 (155)
30.4 (772)
13.9 (353)
10.5 (267)
0.75-14 NPT REDUCING BUSHING (SUPPLIED)
18 (457) RECOMMENDED MINIMUM CLEARANCE FOR ACCESS
6.5 (165)
6.5 (165)
5.0 TO 6.0 (127) (152)
RECOMMENDED CUSTOMER INSTALLATION
SCHEDULE 40 OR SCHEDULE 80 PIPE
CUSTOMER'S FLANGE
NOTES:
1 FLANGE IS 3 INCH, 316L STAINLESS RAISED FACE ANSI 300
2 RECOMMEND CUSTOMER INSTALL FLANGE FROM 5.0 TO 6.0 INCHES FROM VESSEL INTERNAL WALL. (NOTE UNIT LENGTH)
3 WEIGHT: 38 LBS (17kg)
4 ALL DIMENSIONS GIVEN IN INCHES MILLIMETER DIMENSIONS SHOWN IN ( )
PHASE DYNAMICS, INC
RICHARDSON, TEXAS
TITLE
3 INCH 300# INSERTION TYPE TEMP PROBE, 10 IN CAGE
SIZE B
DWG NO. 0070-00196-000
DATE 07/16/01
REV B
© PHASE DYNAMICS, INC.

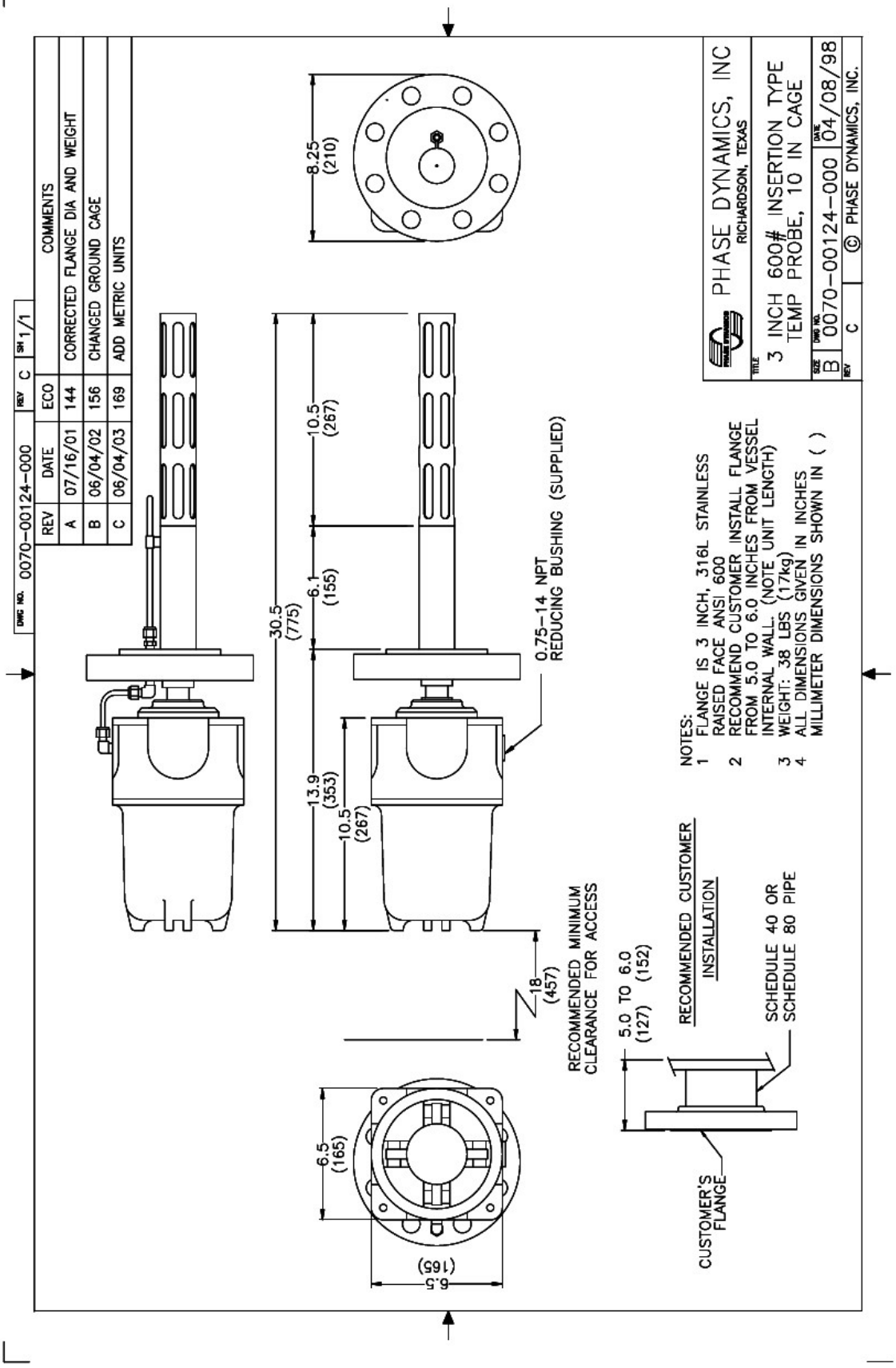
DWG NO. 0070-00124-000
REV C
SH 1/1
REV DATE ECO COMMENTS
A 07/16/01 144 CORRECTED FLANGE DIA AND WEIGHT
B 06/04/02 156 CHANGED GROUND CAGE
C 06/04/03 169 ADD METRIC UNITS
8.25 (210)
10.5 (267)
6.1 (155)
30.5 (775)
13.9 (353)
10.5 (267)
0.75-14 NPT REDUCING BUSHING (SUPPLIED)
18 (457)
RECOMMENDED MINIMUM CLEARANCE FOR ACCESS
6.5 (165)
6.5 (165)
NOTES:
1 FLANGE IS 3 INCH, 316L STAINLESS RAISED FACE ANSI 600
2 RECOMMEND CUSTOMER INSTALL FLANGE FROM 5.0 TO 6.0 INCHES FROM VESSEL INTERNAL WALL. (NOTE UNIT LENGTH)
3 WEIGHT: 38 LBS (17kg)
4 ALL DIMENSIONS GIVEN IN INCHES MILLIMETER DIMENSIONS SHOWN IN ( )
RECOMMENDED CUSTOMER INSTALLATION
5.0 TO 6.0 (127) (152)
SCHEDULE 40 OR SCHEDULE 80 PIPE
CUSTOMER'S FLANGE
PHASE DYNAMICS, INC
RICHARDSON, TEXAS
TITLE
3 INCH 600# INSERTION TYPE TEMP PROBE, 10 IN CAGE
SIZE B
DWG NO. 0070-00124-000
DATE 04/08/98
REV C
© PHASE DYNAMICS, INC.

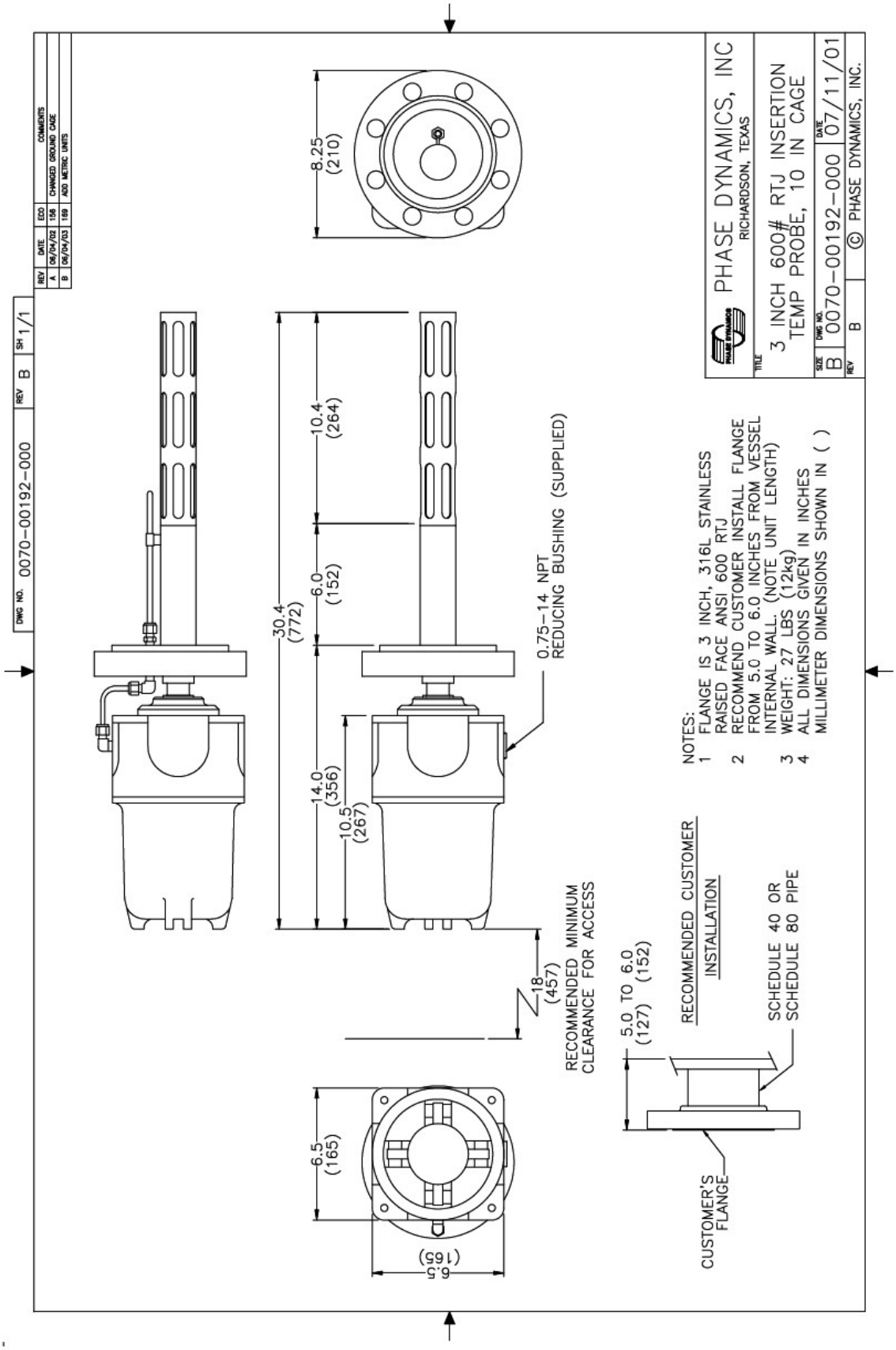
DWG NO. 0070-00192-000
REV B
SH 1/1
REV DATE ECO COMMENTS
A 06/04/02 156 CHANGED GROUND CAGE
B 06/04/03 169 ADD METRIC UNITS
8.25 (210)
30.4 (772)
10.4 (264)
6.0 (152)
14.0 (356)
10.5 (267)
0.75-14 NPT REDUCING BUSHING (SUPPLIED)
18 (457) RECOMMENDED MINIMUM CLEARANCE FOR ACCESS
6.5 (165)
6.5 (165)
5.0 TO 6.0 (127) (152)
RECOMMENDED CUSTOMER INSTALLATION
SCHEDULE 40 OR SCHEDULE 80 PIPE
CUSTOMER'S FLANGE
NOTES:
1 FLANGE IS 3 INCH, 316L STAINLESS RAISED FACE ANSI 600 RTJ
2 RECOMMEND CUSTOMER INSTALL FLANGE FROM 5.0 TO 6.0 INCHES FROM VESSEL INTERNAL WALL. (NOTE UNIT LENGTH)
3 WEIGHT: 27 LBS (12kg)
4 ALL DIMENSIONS GIVEN IN INCHES MILLIMETER DIMENSIONS SHOWN IN ( )
PHASE DYNAMICS, INC
RICHARDSON, TEXAS
TITLE
3 INCH 600# RTJ INSERTION TEMP PROBE, 10 IN CAGE
SIZE B
DWG NO. 0070-00192-000
DATE 07/11/01
REV B
© PHASE DYNAMICS, INC.

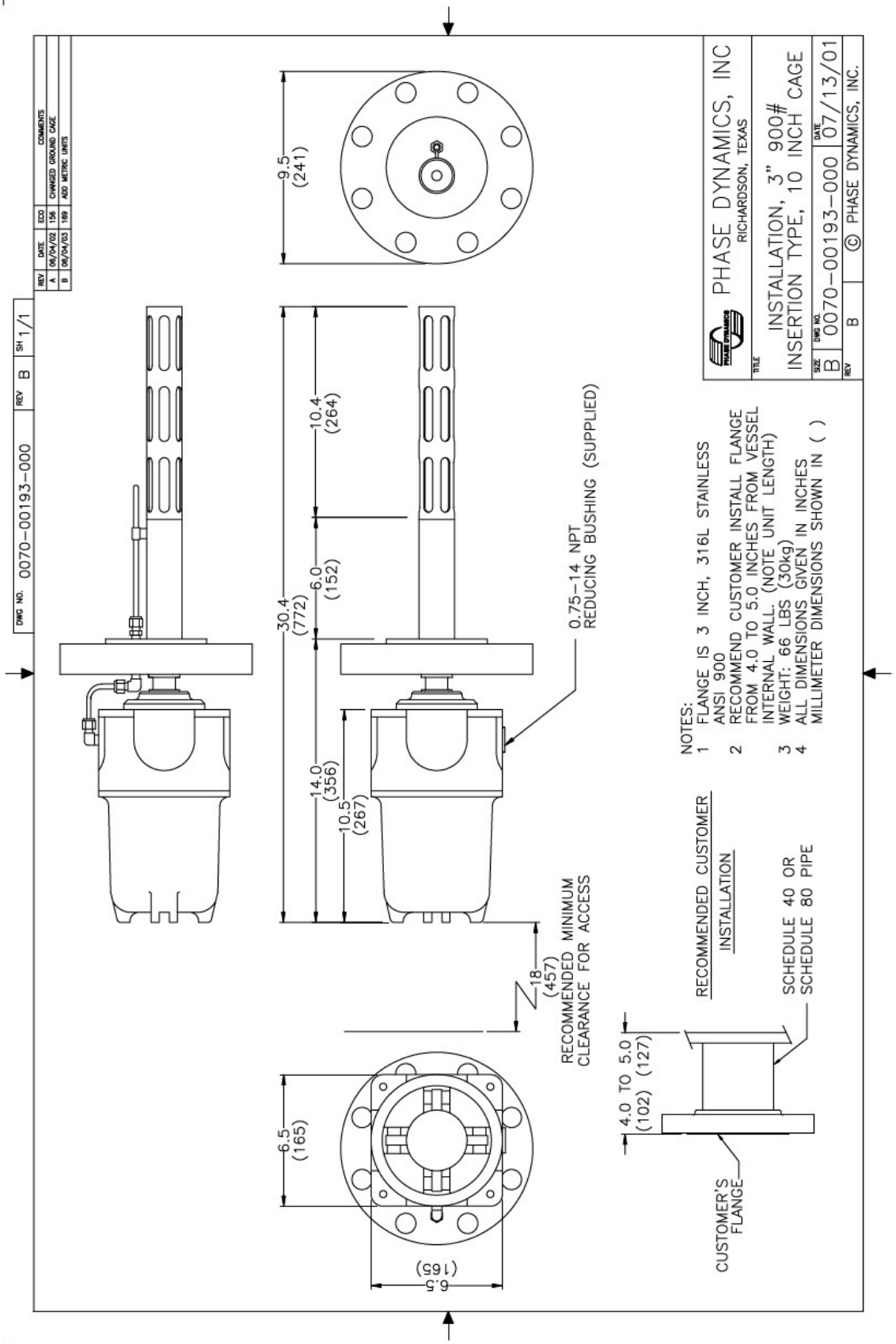
DWG NO. 0070-00193-000
REV B
SH 1/1
REV DATE ECO COMMENTS
A 06/04/02 156 CHANGED GROUND CAGE
B 06/04/02 169 ADD METRIC UNITS
9.5 (241)
10.4 (264)
6.0 (152)
30.4 (772)
14.0 (356)
10.5 (267)
0.75-14 NPT REDUCING BUSHING (SUPPLIED)
18 (457) RECOMMENDED MINIMUM CLEARANCE FOR ACCESS
6.5 (165)
6.5 (165)
NOTES:
1 FLANGE IS 3 INCH, 316L STAINLESS ANSI 900
2 RECOMMEND CUSTOMER INSTALL FLANGE FROM 4.0 TO 5.0 INCHES FROM VESSEL INTERNAL WALL. (NOTE UNIT LENGTH)
3 WEIGHT: 66 LBS (30kg)
4 ALL DIMENSIONS GIVEN IN INCHES MILLIMETER DIMENSIONS SHOWN IN ( )
RECOMMENDED CUSTOMER INSTALLATION
SCHEDULE 40 OR SCHEDULE 80 PIPE
4.0 TO 5.0 (102) (127)
CUSTOMER'S FLANGE
PHASE DYNAMICS, INC
RICHARDSON, TEXAS
TITLE
INSTALLATION, 3" 900# INSERTION TYPE, 10 INCH CAGE
SIZE B
DWG NO. 0070-00193-000
DATE 07/13/01
REV B
© PHASE DYNAMICS, INC.

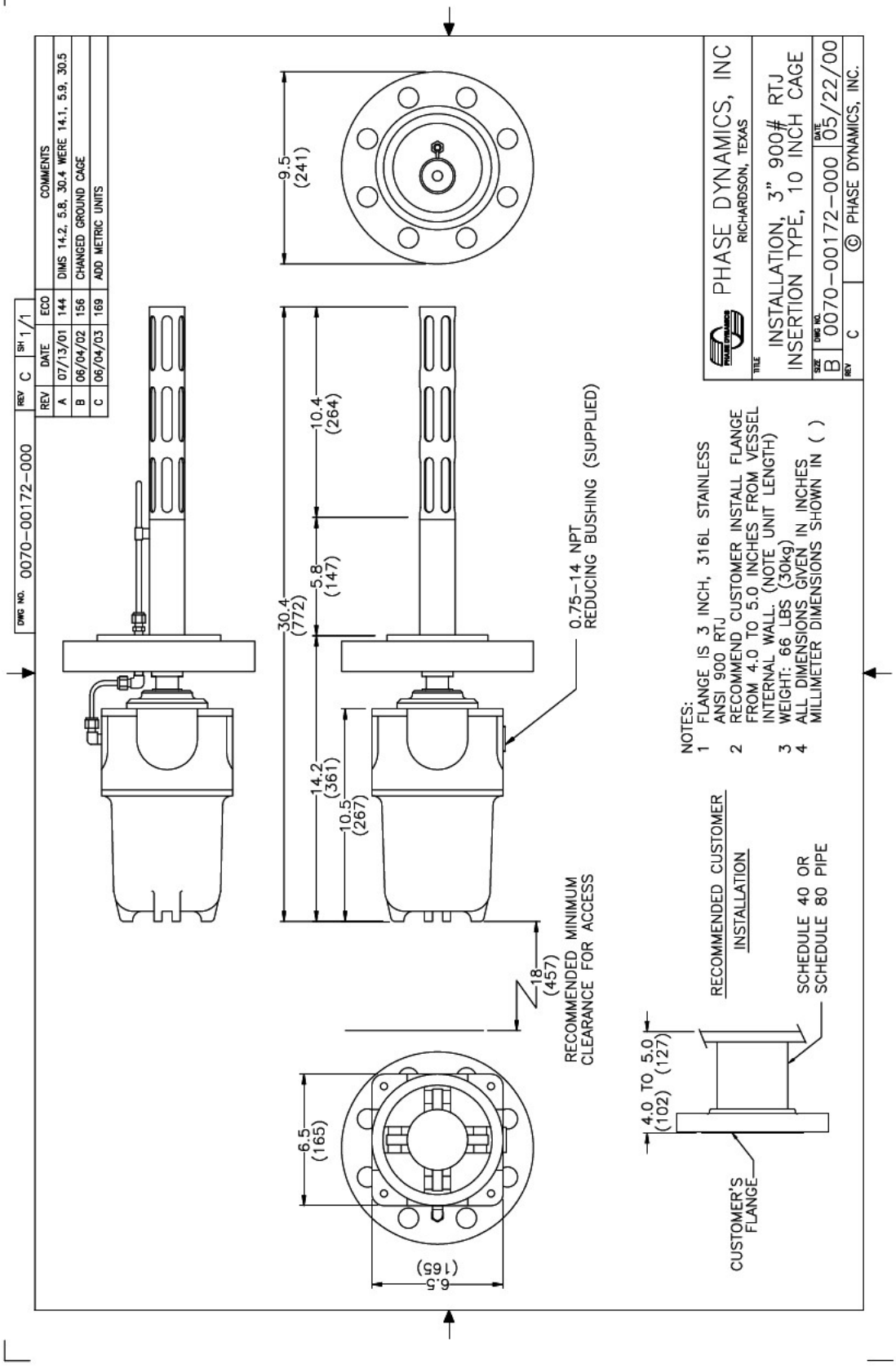
DWG NO. 0070-00172-000
REV C
SH 1/1
REV DATE ECO COMMENTS
A 07/13/01 144 DIMS 14.2, 5.8, 30.4 WERE 14.1, 5.9, 30.5
B 06/04/02 156 CHANGED GROUND CAGE
C 06/04/03 169 ADD METRIC UNITS
9.5 (241)
10.4 (264)
5.8 (147)
30.4 (772)
14.2 (361)
10.5 (267)
0.75-14 NPT REDUCING BUSHING (SUPPLIED)
18 (457)
RECOMMENDED MINIMUM CLEARANCE FOR ACCESS
6.5 (165)
6.5 (165)
NOTES:
1 FLANGE IS 3 INCH, 316L STAINLESS ANSI 900 RTJ
2 RECOMMEND CUSTOMER INSTALL FLANGE FROM 4.0 TO 5.0 INCHES FROM VESSEL INTERNAL WALL. (NOTE UNIT LENGTH)
3 WEIGHT: 66 LBS (30kg)
4 ALL DIMENSIONS GIVEN IN INCHES MILLIMETER DIMENSIONS SHOWN IN ( )
RECOMMENDED CUSTOMER INSTALLATION
SCHEDULE 40 OR SCHEDULE 80 PIPE
4.0 TO 5.0 (102) (127)
CUSTOMER'S FLANGE
PHASE DYNAMICS, INC
RICHARDSON, TEXAS
TITLE
INSTALLATION, 3" 900# RTJ INSERTION TYPE, 10 INCH CAGE
SIZE B
DWG NO. 0070-00172-000
DATE 05/22/00
REV C
© PHASE DYNAMICS, INC.